HAYWARD

BID #2303-080422
Digester Gas Treatment System Media Replacement
at
Water Pollution Control Facility

Bids must be received
no later than:

Thursday, September 29, 2022 @ 3:30 pm

Deliver bids to the office of
Rita Perez, Purchasing Manager
bids@hayward-ca.gov
777 B Street 3rd Floor
Hayward, CA 94541

TABLE OF CONTENTS

1. Table of Contents — Page 2

2. General Conditions and Instructions — Pages 3-15

3. Special Conditions — Pages 16-17

4. Technical Specifications for Digester Gas Treatment System Media Replacement — Pages 18–22

5. Bid Form — Pages 23-24

To be completed and returned along with the bid form:

- Contractor's License — Page 25
- Bidder's Reference and Statement of Experience — Page 26
- Designation of Subcontractors — Page 27
- Acknowledgement of Addenda — Page 28
- Signature Affidavit for Non-Collusion — Page 29
- Contractor's Certificate Regarding Worker's Compensation — Page 30
- Non-Discriminatory Employment Provision — Pages 31-33
- Non-Nuclear Affirmation — Page 34

Attachments:

- A- Contract Bonds (Performance, Labor and Material) — Pages 35-38
- B- General Provisions — Pages 39-42

- **Exhibit B – Drawings and Manufacturer's Instructions and Media Specifications:** — Page 45

  Attachment 1 - Siloxane Removal Vessel Drawings.
  Attachment 2 – H2S Removal Vessel Drawings.
  Attachment 3 – Gas Conditioning System P&ID and System Layout Drawing.
  Attachment 4 – Hydrogen Sulfide Removal System Procedures & Manufacturer's Instructions for H2S Removal System Media Replacement with Iron Sponge Material.
  Attachment 5 - Manufacturer's Instructions for Siloxane Removal System Media Replacement.
  Attachment 6 – Iron Sponge Material Specification for H2S Removal.
  Attachment 7 - Activated Carbon Material Specification for Siloxane Removal.
  Attachment 8 - 5.7 Siloxane Removal System Detailed Description of the function
  Attachment 9 - Filter Foam Grade: 60 PPI Charcoal Blend
  Attachment 10 – Photographs

NOTE: The Table of Contents is to be made a part of the above referenced bid.

GENERAL CONDITIONS AND INSTRUCTIONS TO BIDDERS

No bid proposals shall receive consideration by the City of Hayward for **Bid# 2303-080422** unless made in accordance with the following instructions:

It is the responsibility of the bidder to assure that the bid is received at the City of Hayward prior to the bid-opening deadline date and time. Bids received beyond the bid-opening deadline will not be accepted and will be returned unopened. Late bids, unsealed bids, unlabeled bids, incomplete bids, or bids otherwise not in compliance with the General Conditions of this Invitation to Bid, will be rejected. By submitting a response, bidder acknowledges and accepts the General Conditions and all terms and conditions contained in this Invitation to Bid.

All bids must be submitted in ink on the bid form. Cover letters, additional sheets, etc. may be included. The total bid excluding sales tax must appear on the bid form as indicated.

Erasures are NOT acceptable. Changes must be lined out and corrections inserted adjacent to and initialed by the bidder's authorized representative. Use of correction fluid or tape is not acceptable.

Vendor is required to quote "NEW" equipment, material or product. Recycled, remanufactured, or previously owned product will not be accepted unless otherwise stated in the Invitation to Bid.

All bids must include the company name and address and must be signed by an authorized representative of the company; signature must be an original signature, or an original signature stamp, on the Bid Form.

Alternate or incomplete bids will NOT be accepted.

City of Hayward, at its sole option, may correct arithmetic or extension errors, and obtain clarification, if necessary.

Number of days shall mean calendar days After Receipt of Order (ARO). Bids quoting delivery beyond the requirement may be rejected.

Bid modifications, corrections, or additions received beyond the bid deadline will NOT be considered.

Telephone or facsimile bids will NOT be accepted.

By submitting a response to this Invitation to Bid, Bidder acknowledges and accepts the City of Hayward's standard terms and conditions.

DEADLINE FOR RECEIPT OF PROPOSALS

Bid proposals must be sealed and filed at the office of the Purchasing Manager located at 777 B Street, Hayward, CA 94541 no later than **Thursday, September 29, 2022 at 3:30 pm.** It is the sole responsibility of the bidder to see that his bid is received in proper time. Any bid received after the schedule closing time for receipt of bids will be returned to the bidder unopened.

BIDDERS CONFERENCE/SITE INSPECTION

There is a will be a pre-bid conference at the jobsite on **Tuesday, September 13, 2022 at 10:30 AM**. The City strongly encourages the Contractor to inspect the project site to familiar himself with the work details before bidding. Any failure to properly investigate the conditions of the site shall not relieve the Contractor from the responsibility of estimating the proposed work for his bid.

CONTACT

Any administrative questions regarding bidding procedures should be directed to the Purchasing Manager, Rita Perez at (510) 583-4801; email: rita.perez@hayward-ca.gov

Questions relating to the project management may be directed to David Donovan at (510) 293-5099; email: david.donovan@hayward-ca.gov.

CLARIFICATION DEADLINE

Questions regarding documents, discrepancies, omissions, or doubts as to meaning must be submitted in writing to the office of the Purchasing Manager, Rita Perez at (510) 583-4801; email: rita.perez@hayward-ca.gov, no later than **Tuesday, September 20, 2022 @ 3:30 pm.**

Please note important proposal dates below:

Ref	Activity	Date
1	Issue RFQ	Wednesday 8/31/2022
2	**Pre-bid Conference**	**Tuesday, 09/13/2022 at 10:30 PM**
3	Deadline: Email RFQ Questions	Tuesday, 09/20/2022 at 3:30 PM
4	**City provides RFQ question answers via email**	**Thursday, 09/22/2022**
5	Deadline: Email RFQ Proposal	Thursday, 09/29/2022 at 3:30 PM
6	**Selection of Firm or Individual**	**TBD**

MODIFICATIONS

Changes in or additions to the Bid Form, recapitulations of the work bid upon alternative proposals, or any other modifications of the Bid Form which is not specifically called for in the contract documents may result in the rejection of the bid as not being responsive to the Bid. No oral or telephonic modification of any bid submitted will be considered.

WITHDRAWAL OF BID PROPOSALS

Bid proposal may be withdrawn by the bidder prior to the time fixed for the opening of bids, but may not be withdrawn for a period of ninety (90) days after the opening of bids. A successful bidder shall not be relieved of the bid submitted without the City's consent or bidder's recourse to Public Contract Code sections 5100 et. seq.

ADDENDA OR BULLETINS

Any addenda or bulletins issued during the time of bidding shall form a part of the drawing and specifications issued to bidders for the preparation of their proposals and shall constitute a part of the contract documents. Initials of bidders on the bid form shall reflect receipt of all addenda prior to submittal of the bid.

AWARD OF CONTRACT

The City reserves the right to reject any and all bid proposals, to contract work with whomever and in whatever manner the City decides, to abandon the work entirely and to waive any informality or non-substantive irregularity as the interest of the City may require and to be the sole judge of the equipment offered.

Bids will be evaluated on basis of lowest, responsible, responsive bid for **Oxidation Pond Bullrush Removal**. The City reserves the right to consider quality, warranty, compatibility with existing equipment, and any other information considered to be in the best interests of the City of Hayward.

At the time this contract is awarded, the Contractor shall possess a class **A or B License -**

An optional pre-bid conference will be held at the jobsite on **Tuesday, September 13, 2022 at 10:30 AM** at the job site.

The City of Hayward reserves the right to purchase quantities by necessity only regardless of approximate quantities indicated on the bid form. Bidder shall also have the right to refuse sale in reduced quantities; in such instances, the award shall go to the next lowest qualified bidder.

A written Purchase Order mailed or Notice to Proceed will be furnished to the successful bidder within time for acceptance specified, results in a binding contract without further action by either party. The contract shall be interpreted, construed and given effect in all respects according to the laws of the State of California.

Award of this bid does not imply exclusive agreement with the City of Hayward.

BONDS

The successful bidder, simultaneously with the execution of the agreement, shall furnish a payment bond in the amount of 100% of the contract price and a faithful performance bond in the amount of 100% of the contract price. Bonds secured from a surety company issued by corporation duly and legally licensed to transact business in the State of California and approved by the City.

Bid bond is not required for this project.

BID PROTEST

Should any bidder question or protest the award of the contract must submit such question or protest in writing to the Purchasing Manager no later than 5:00 pm on the third (3rd) business day following the date of the bid opening. Such submittal must fully explain the basis of the objection supported by all relevant information facts and details. Letter must be signed by an authorized representative stating specific reason(s) for the protest including all relevant facts (law, rule, regulation, and criteria).

Questions or protests not furnished in writing as prescribed will not be accepted.

REJECTION OF BIDS

The City reserves the right to accept or reject any and all bids or any portion or combination thereof, or award on the basis of the total bid. The City of Hayward reserves the right to reject any and all bids, or to waive any informality or non-substantial irregularity in any bid.

EXECUTION OF CONTRACT

The successful bidder shall, within ten (10) calendar days of receiving notification of award of the contract, sign and deliver to the City the executed contract along with appropriate bonds and insurance, if required. In the event the bidder to whom an award is made fails or refuses to execute the contract within ten (10) calendar days, the City may declare the bidder's bid deposit or bond forfeited as damages caused by the failure of the bidder to enter into the contract, and may award the work to the next lowest responsible bidder, or may reject all bids and call for new bids.

RIGHTS AND REMEDIES IN THE EVENT OF DEFAULT

If the bidder defaults, the City may procure the articles or services from other sources and may recover the loss occasioned thereby from any unpaid balance due the bidder or by proceeding against a bidder's bonds, if any, or by suit against the bidder. The prices paid by the City shall be considered the prevailing market prices at the time such purchase is made.

GOVERNING LAW AND VENUE

In the event of litigation, the bid documents, specifications and related matters shall be governed by and construed in accordance with the law of the State of California. Venue shall be with the appropriate state or federal court located in Alameda County.

SUBCONTRACTORS

Pursuant to the Subletting and Subcontracting Fair Practices Act, Government Code Section 4100-4114, inclusive, every bidder shall, on the enclosed form set forth the name and location of the place of business of each subcontractor who will perform work or labor or render service to the bidder in or about the work in an amount in excess of one-half (1/2) of one percent (1%) of the bidder's total bid and the portion of the work which will be done by each subcontractor. If the bidder fails to specify a subcontractor for any portion of the work performed under the contract in excess of one-half (1/2) of one percent (1%) of the bidders total bid, bidder agrees that bidder is fully qualified to and will perform that portion of the work. The successful bidder shall not, without the consent of the City, either substitute any person as subcontractor in place of the subcontractor designated in the original bid, permit any subcontractor to be voluntarily assigned or transferred, allow the work to be performed by anyone other than the original subcontractor listed in the bid or sublet or subcontract any portion of the work in excess of one-half (1/2) of one percent (1%) of the total bid as to which the bidder's original bid did not designate a subcontractor.

CONTRACTOR'S FINANCIAL OBLIGATIONS

The Contractor shall make prompt payments for all labor, materials, and services furnished to or for him in accordance with the Contract requirements. Prior to submitting a request for final payment, the Contractor shall provide the City with lien releases or conditional lien releases for all subcontractors and suppliers used on this project.

TRANSFER OF INTEREST

No interest in the contract shall be transferred to any other party without permission of the City.

PREVAILING WAGE

Prevailing wages must be paid to all workers employed on a public works project when the public works project is over $1,000. Prevailing Wages: The Work is subject to the payment of not less than prevailing wages under Labor Code Section 1770 et seq. Bidders are hereby notified that the Director of Industrial Relations has ascertained the general prevailing rate of per diem wages and the rates for overtime and holiday work in the locality in which the work is to be performed for each craft, classification or type of worker needed to perform the Work under the contract which will be awarded to the successful bidder. Copies are on file with and available upon request from the City Engineer or at http://www.dir.ca.gov/dlsr/DPreWageDetermination.htm.

Bidders are further notified that this project is subject to compliance monitoring and enforcement by the Department of Industrial Relations. Further information on Compliance Monitoring Unit requirements can be found at https://www.dir.ca.gov/dlse/cmu/cmu.html.

No contractor or subcontractor may be listed on a bid proposal for a public works project submitted on or after March 1, 2015 unless registered with the Department of Industrial Relations pursuant to Labor Code section 1725.5, with limited exceptions from this requirement for bid purposes only under Labor Code section 1771.1(a).

No contractor or subcontractor may be awarded a contract for public work on a public works project awarded on or after April 1, 2015 unless registered with the Department of Industrial relations pursuant to Labor Code section 1725.5.

Contractor agrees to comply with all related provisions of the Labor Code, including but not limited to, the provisions of Labor Code Section 1775 relating to the payment of prevailing wages, Section 1777.5 relating to the employment of apprentices and Section 1811-1813 relating to the payment of Overtime.

WORKERS' COMPENSATION

In accordance with the provisions of Section 3700 of the Labor Code, Contractor shall secure the payment of compensation to his employees. Contractor hereby acknowledges the following statement:

> "I am aware of the provisions of Section 3700 of the Labor Code which require every employer to be insured against liability for workers' compensation or to undertake self-insurance in accordance with the provisions of that code, and I will comply with such provisions before commencing the performance of the work of this contract documents."

The Contractor shall take out and maintain during the life of the contract, Statutory Worker's Compensation and Employer's Liability Insurance with limits not less than One Million Dollars ($1,000,000) for all its employees to be engaged in the work on the project under the Contract. Should any work be sublet, the Contractor shall require the subcontractor similarly to provide Worker's Compensation and Employer's Liability Insurance, all in strict compliance with State laws and to fully protect the City from any and all claims arising out occurrences on the work.

PROOF OF CARRIAGE OF INSURANCE

The contractor shall take out and maintain during the life of the Agreement all the insurance required by this section and shall annually submit certificates for review and approval by the City. Acceptance of the certificates shall not relieve the contractor of any of the insurance requirements, and shall not decrease the liability of the contractor. The City reserves the right to require the contractor to provide insurance policies for review by the City.

Contractor shall not commence work nor shall contractor allow any subcontractor to commence work under this contract until all required insurance and certificates have been delivered in duplicate to and approved by the City. Certificates and insurance policies shall include the following clause:

> "This policy shall not be canceled or reduced in required limits of liability or amount of insurance until notice has been mailed to the City stating date of cancellation or reduction. Date of cancellation or reduction may not be less than ten (10) days after date of mailing notice."

Certificate of insurance shall state in particular those insured, extent of insurance, location and operation to which insurance applies, expiration date and cancellation and reduction notice. Contractor shall be solely responsible for:

1) Compliance of subcontractors with insurance requirements; and
2) Other insurance coverage including but not limited to loss, theft, fire, property damage, and glass breakage.

COMMERCIAL GENERAL AND AUTOMOBILE LIABILITY INSURANCE

The Contractor shall take out and maintain in the name of the Contractor and as an additional insured, the City, during the life of the Contract, such Commercial General and Automobile Liability Insurance as shall protect the Contractor, the City, and its officials, officers, directors, employees and agents from claims which may arise from operations under this contract, whether such operations be by the Contractor, by the City, its officials, officers, directors, employees and agents, any subcontractors or by anyone directly or indirectly employed by any of them. Such coverage shall be at least as broad as: Insurance Service Office Commercial General Liability coverage (occurrence Form CG0001) and Insurance Service Form Number CA0001 (Ed.1/87) covering Automobile Liability, Code 1 (any auto). This liability insurance shall include but not limited to protection against claims arising from bodily and personal injury and damage to property, resulting from the Contractor's or subcontractor's operations, including the use of owned or non-owned automobiles, products and completed operations. The amounts of insurance shall not be less than the following:

- Commercial General Liability: $1,000,000 per occurrence for bodily injury, personal injury and property damage. If Commercial General Liability Insurance or other form with a general aggregate limit is used, either the general aggregate limit shall apply separately to this project/location or the general aggregate limit shall be twice the required occurrence limit.
- Automobile Liability: $1,000,000 per accident for bodily injury and property damage.
- Employer's Liability Insurance: $1,000,000 per occurrence.

The following endorsements must be attached to the policy:

- ***The City must be named as an additional named insured under the coverage afforded with respect to the work being performed under the contract.***

- If the insurance policy covers on an "accident" or a "claims made" basis, it must be changed to "occurrence".
- The policy must cover Personal Injury as well as Bodily Injury.
- The policy must cover complete contractual liability. Exclusions of contractual liability. Exclusions of contractual liability as to bodily injuries, personal properties and property damages. MUST BE ELIMINATED from the basic policy endorsements. This endorsement may be satisfied by amending the definition of "incidental contract" to include written contract.
- Broad form property damage liability must be afforded. Permission is granted for deductible, which shall not exceed $10,000 without special approval of the City.
- A certificate shall be provided which states that the coverage is PRIMARY INSURANCE and that no other insurance affected by the City will be called upon to contribute to a loss under this coverage.
- The policy must include a cross liability or severability of interest clause.
- Any failure of the Contractor to comply with the reporting provisions of the policies shall not affect coverage provided to the City, et al.
- Notice of Cancellation, non-renewal, reduction in limits, or material change, shall be sent to the City with at least **thirty (30) days** prior written notice by certified mail.
- Insurance is to be placed with California Admitted Insurers with a Best's rating of no less than A:XI
- The policy covers use of Non-owned Autos;

Should any insurance policy be materially changed before final completion of the work, and the Contractor fail to procure other insurance as herein required, immediately, the City may procure such insurance and deduct the cost thereof from any amounts due to the Contractor.

Insurance is to be placed with insurers acceptable to the City of Hayward's Legal Department.

COMPLETION AND LIQUIDATED DAMAGES

Should the Contractor fail to complete this contract, and the work provided herein within the times fixed for such completion, due allowance being made for contingencies provided for herein, the Contractor shall become liable to the City for all loss and damage which the latter may suffer of account thereof.

As it is difficult to ascertain and determine the actual damage which the City will sustain in the event of any, by reason of such delay; and it is therefore agreed that said Contractor will pay to the City the sum of three hundred dollars ($300.00) per day for each and every calendar days delay beyond the time herein prescribed in furnishing the said work as liquidated damages; the said Contractor agrees to pay said liquidated damages as herein provided, and in case the same is not paid, agrees that said City may deduct the amount thereof from any money due or that may become due said Contractor under this Contract, and should such money be insufficient to cover such damages, the City shall have the right to recover the balance from the Contractor or his/her Surety. In addition to the above stipulated liquidated damages, the Contractor shall pay the cost of the Inspector's salary for the time the Inspector is required on the project beyond the allotted contract time. Payment for Inspector's salary to be made directly to the City. The City shall determine the time the Inspector is required on the Project.

The Contractor shall not be charged with liquidated damages because of any delays in the completion of the work due to unforeseeable causes beyond his/her control and without default or negligence of the Contractor, including, but not restricted to acts of the public enemy, acts of the government, acts of another prime contractor in the performance of the contract with the City, fire, flood, epidemics, delays of subcontractors due to such causes. The Contractor shall within ten (10) days from the beginning of any such delay notify the

City in writing, of the causes of the delay, who shall, after ascertaining the facts and the extent of the delay extend the time for completion of the work, when in its judgment the finding of the facts and determination thereon shall be final and conclusive on the parties thereto.

The Contractor shall not be assessed for liquidated damages for delay in completion of the project, when such delay was caused by the failure of the awarding authority of this contract or the City of the utility to provide for removal or relocation of the existing utility facility; however, when the Contractor is aware that removal or relocation of an existing utility has not been provided, the Contractor shall promptly notify the awarding authority, so that provision for such removal or relocation may be made to avoid and minimize any delay which might be caused by the failure to remove or relocate the utility or to provide its removal or relocation.

LOSS OR DAMAGE:

The Contractor shall take and assume all responsibility for the work. The Contractor shall bear all losses and damages which may occur to said work or any part or portion thereof and in connection therewith to persons and/or property, and shall fully indemnify the City from and against the same.

The Contractor, subject to the limitations of Civil Code Section 2782, shall assume the defense of and indemnify and save harmless the City, officers and employees from every expense, liability or payment by reason of injury (including death) to persons or damage to property suffered through any act or omission, including passive and/or active negligence, of the Contractor, or any Subcontractors or anyone directly or indirectly employed by either of them, or from the condition of the premises while in the control of the Contractor or any Subcontractors, or anyone directly or indirectly employed by either of them or arising in any way from the work called for by this contract, or any part of the premises.

INTERPRETATION OF CONTRACT DOCUMENTS:

Should any question arise concerning the intent or meaning of drawings or specification, such question(s) shall be submitted to the City for interpretation.

EXTRA AND/OR ADDITIONAL WORK AND CHANGES:

The City at any time during the progress of said work, request any alterations, deviations, additions, or omissions from the said contract, specifications, or drawings, it shall be at liberty to do so and the same shall in no way affect or make void the contract, but will be added to or deducted from the amount of said contract price as the case may be, by a fair and reasonable valuation. The value of any such extra work or change shall be determined in one or more of the following ways:

a. By estimate and acceptance in a lump sum.
b. By unit prices named in the contract or subsequently agreed upon.
c. Cost of labor, materials and equipment plus overhead and profit as indicated below.

    1. Work by Contractor or Subcontractors: For any portion of the changed work which is to be performed by a subcontractor, Contractor shall furnish to the City a detailed estimate prepared and signed by subcontractor of the cost to subcontractor for performing the changed work. At the option of the City, a lump sum estimate of such cost to subcontractor may be accepted in lieu of the detailed estimate. The combined costs for subcontractor's overhead, profit, taxes, supervision, and bonds **shall not exceed fifteen percent**. Contractor may add no more than fifteen percent for its overhead, profits, insurance, taxes, supervision, bonds, and any other

miscellaneous costs for such work, known as overhead and profit hereafter. Estimates of the amount to be deleted from subcontractor's portion of the work shall be the gross cost of the deducted work plus at least six percent overhead, bonds, insurance, and related savings.

2. Markup for Added Work or Credit for Deleted Work: Where changed work is performed, Contractor may add to the total cost estimate for such work no more than fifteen percent for profit, overhead, insurance, taxes, supervision, and bonds. Estimate of the amount to be deducted from the contract price shall be the gross cost of the deducted work plus at least six percent for overhead, bonds, insurance, taxes and related savings.

   For proposed change orders which involve both added and omitted work, Contractor shall separately estimate the cost of the added work before markups, and separately estimate the cost of the omitted work before allowance of a credit.

   If the difference between the costs results in an increase to the contract price, the markup for added work shall be applied to the difference, and if the difference in the costs results in a decrease, then the markup for deleted work shall be applied to the difference.

3. Market Values: Cost for added work shall be based on market values prevailing at the time of the change, unless Contractor can establish to the satisfaction of the City that it investigated all possible means of obtaining work at prevailing market values and that the excess cost could not be avoided by it.

   When a change order deletes work from the contract, the computation of the cost thereof shall be the values which prevailed at the time bids for the work were opened.

If none of the above methods is agreed upon, the Contractor, provided he/she receives an order to do so as above, shall proceed with the work. In such case and also under case "C", he/she shall keep and present in such form as the City may direct, a correct account of the net cost of labor and materials, together with vouchers.

No extra work shall be performed or change be made unless in pursuance of a written order from the City stating that the extra work or change is authorized. No claim for an addition to the Contract sum shall be valid unless so ordered.

TERMINATION BY THE CITY FOR BREACH, ETC.:

If the Contractor should be adjudged a bankrupt, or if he/she should make a general assignment for the benefit of his/her insolvency, or if he/she or any subcontractors should violate any of the provisions of the contract, or if he/she should persistently or repeatedly refuse or should fail to prosecute the work properly for failure to perform any provisions of this contract, or if he/she should fail to make prompt payment to subcontractors or for material or labor, or persistently disregard laws, ordinances or the instruction of the City, then the City may serve written notice upon the Contractor and his/her Surety of its intention to terminate the contract, such notice to contain the reasons for such intention to terminate the contract, and unless within five (5) days after the serving of such notice, such violation shall cease and satisfactory arrangements for correction thereof be made, the contract shall, upon expiration of said five (5) days , cease and terminate. In the event of any such termination, the City shall immediately serve written notice upon the Surety and the Contractor, and the Surety shall have the right to take over and perform the Contract provided, however, that if the Surety within ten (10) days after the serving upon it

of notice of termination does not give the City may take over the work and prosecute the same completion by any method it may deem advisable, for the account and at the expense of the Contractor and the Contractor and occasioned the City thereby, and in such event the City may without liability for doing so, take possession of and utilize in completing the work such materials, appliances, plant and other property belonging to the Contractor as may be on the site of the work and necessary therefore. In such case the Contractor shall not be entitled to receive any further payment until the work is finished.

If unpaid balance of the contract price shall exceed the expense of finishing the work, including compensation for additional managerial and administrative services such shall be paid to the Contractor. If such expense shall exceed such unpaid balance, the Contractor shall pay the difference to the City.

ASSIGNMENT OF CONTRACT:

Neither the Contract, nor any part thereof nor any moneys due of to become due hereunder may be assigned by the Contractor without the approval of the City, not without the consent of the Surety unless the Surety has waived its right to notice of assignment.

PAYMENTS WITHHELD:

The City may withhold, or on account of subsequently discovered evidence, nullify the whole or part of any certificate to such extent as may be necessary to protect the City from loss on account of:

a. Defective work not remedied.
b. Claims filed or reasonable evidence indicating probable filing of claims.
c. Failure of the Contractor to make payments properly to subcontractors, or for material or labor.
d. A reasonable doubt that the contract can be completed for the balance then unpaid.
e. Damage to another contractor.

Documentation of disposal shall be delivered to the City.

CLAIMS

All claims of $375,000 or less which arise between the contractor and the local agency shall be subject to the settlement an arbitration provisions set forth in Public Contract Code Sections 20103 through 20104.8, which provisions are incorporated herein by this reference.

PRICE, TERMS AND CONDITIONS

Price, terms and conditions of this bid are considered valid for sixty (60) days, from date of bid opening, unless the offering party in writing allows for a longer period of time.

Any cash discounts given to the City of Hayward must be so stated on the bid.

Prompt payment discounts offered for payment within less than thirty (30) calendar days will not be considered in evaluating offers for award. However, offered discounts of less than thirty (30) days will be taken if payment is made within the discount period, even though not considered in the evaluation of offers.

In connection with any discount offered, time will be computed from date of complete delivery of the supplies or equipment as specified, or from date correct invoices are received if the latter is later than the date of delivery. Payment is deemed to be made for the purpose of earning the discount on the date of mailing the warrant or check.

PERMITS AND LICENSES

Any person doing business in the City of Hayward is required by Chapter 8, Section 1 of the Municipal code to pay a business license tax. A City of Hayward Business License is required before starting work. The successful bidder shall have or procure a business license and, prior to initiation of work, show evidence thereof to the Revenue Department. The successful bidder shall also, procure all permits, pay all charges and fees and give all notices necessary and incidental to the due and lawful prosecution of The Work. In addition, Bidder must include Contractor's license number and date of expiration on the bid form.

WORKING HOURS

Job to start at a time designated by the City and the Contractor Regular working hours, Monday through Friday except during legal holidays if approved by the Purchasing Department in writing. The Contractor shall give a minimum of three (3) day notice to the Project Manager for any work scheduled outside of the regular working hours. The Contractor is responsible to schedule and coordinate its work accordingly to allow for inspections by the Project Manager or its designee as required by these specifications.

CLEAN UP

The contractor shall be responsible for necessary cleanup during progress of work, and shall take necessary safety precautions to prevent injury to the workers or the public. Upon the completion, the contractor shall remove all of the contractor's equipment and debris, leaving the entire area clean and ready to use, all as approved by the City.

CONTRACTOR USE OF WORKSITE

Confine Worksite operations to areas permitted by law, ordinances, permits, and the Contract Documents. Consider the safety of the Work and that of people and property on and adjacent to the Worksite when determining amount, location, movement, and use of materials and equipment on Worksite. Do not load Worksite with equipment and products which would interfere with the area's normal access, traffic or flow. Only equipment, tools or materials required for this work may be stored at the Worksite.

PROJECT PHASING AND WORK SCHEDULE

The Contractor shall submit a complete and detailed schedule of the work with specific milestones for the design, procurement, installation and modification.

INTENT OF THE CONTRACT

It is the intent of this contract to obtain a finished, complete in place, fully functional, and suitable for its intended purpose workmanlike job of high quality, with all equipment properly installed and operating.

Except as otherwise specified, the Contractor shall furnish the following to the full extent as required by the Contract: Labor, superintendence, products, construction equipment, tools, machinery, materials and

appurtenances as necessary. Utilities required for construction and related activities, facilities and services necessary to properly execute and complete the Work, including security, storage area, temporary safety fencing for worksite and all materials, including City furnished equipment, awaiting incorporation into the Work.

In the specifications, plans, schedules and details, information is conveyed by means of brief mention or notation which, regardless of brevity, shall be binding exactly as if presented in complete sentences employing mandatory language. Work not listed in the specifications or drawings, but clearly implied as necessary to complete the job, shall be included as though fully specified and drawn.

Titles and headings to sections and paragraphs in these specifications are introduced merely for convenience and shall not be taken as a correct or complete segregation of the several units of materials and labor. No responsibility, either direct or implied, will be assumed by the City, for omissions or duplications by the Contractor or its subcontractors due to real or alleged error in arrangement of matter in the Contract Documents.

NO PERSONAL LIABILITY

Neither the City Council, officers, employees or agents of the City of Hayward, nor any other officer or authorized assistant or agent shall be personally responsible for any liability arising from or in connection with The Work.

RESPONSIBILITY OF THE CITY

The City of Hayward shall not be held responsible for the care or protection of any material or parts of The Work prior to final acceptance, except as expressly provided for in these specifications.

SUCCESSFUL BIDDER NOT AN AGENT OF THE CITY OF HAYWARD

The right of general supervision of the City of Hayward shall not make the Successful Bidder an agent of the City; and the liability of the Successful Bidder for all damages to persons or to public or private property arising from the Successful Bidder's execution of The Work shall not be lessened because of such general supervision.

COOPERATION

Should work be performed by other firms, within or adjacent to The Work specified, or should work of any other nature be underway by other forces within or adjacent to said limits, the Successful Bidder shall cooperate with all such other firms or other forces to the end that any delay or hindrance to their work will be avoided. The right is reserved to perform other or additional work at or near the site (including material sources) at any time, by the use of other forces. When two or more firms are employed on related or adjacent work, each shall conduct his operation in such a manner as not to cause any unnecessary delay or hindrance to the other. Each firm shall be responsible to the other for all damage to work, to persons or property caused to the other by his operations and for loss caused the other due to his unnecessary delays or failure to finish The Work within the time specified for completion.

PUBLIC RECORDS

All responses to the Invitation to Bid will become the property of the City. Once a final award is made, all bid responses, except financial and proprietary information, become a matter of public record and shall be regarded by the City as public records. The City shall not in any way be liable or responsible for the disclosure of any such records or portions thereof if the disclosure is made pursuant to a request under the Public Records Act.

GENERAL PROVISIONS FOR PURCHASES OF WORK AND SERVICES

The City of Hayward's general provisions for purchases of work and services are described in Attachment 1. The provisions are dated 11/15/1999 and include sections 1.00 Legal Relations and Responsibilities through 1.26 Recycled Materials.

DEFEND, INDEMNIFY AND HOLD HARMLESS

To the full extent permitted by law, Contractor shall defend, indemnify and hold harmless City of Hayward, its employees, agents, officials, from any liability, claims, suits, actions, arbitration proceedings, administrative proceedings, regulatory proceedings, losses, expenses or costs of any kind, whether actual, alleged or threatened, actual attorney fees incurred by the City, court costs, interest, defense costs including expert witness fees and any other costs or expenses of any kind whatsoever incurred in relation to, as a consequence of or arising out of or in any way attributable in whole or in part to the performance of this contract and agreement. All obligations under this provision are to be paid by Contractor as the City incurs them.

Without affecting the rights of the City under any provision of this agreement or this section, Contractor shall not be required to indemnify and hold harmless City of Hayward as set forth above for liability attributable to the sole fault of City of Hayward, provided such sole fault is determined by agreement between the parties or the findings of a court of competent jurisdiction. This exception will apply only in instances where the City of Hayward is shown to have been solely at fault and not in instances where Contractor is solely or partially at fault or in instances where City's fault accounts for only a percentage of the liability involved. In those instances, the obligation of Contractor will be all-inclusive and the City will be indemnified for all liability incurred, even though a percentage of the liability is attributable to conduct of the City.

Contractor acknowledges that its obligation pursuant to this section extends to liability attributable to City of Hayward, if that liability is less than the Sole fault of City.

ATTORNEY'S FEES

In the event suit is brought by either party in connection with this agreement, the prevailing party shall have judgment for court costs and a reasonable attorney's fee.

END OF SECTION

SPECIAL CONDITIONS

MANUFACTURER'S RECOMMENDATIONS

If the manufacturer of any material or equipment, which is to be incorporated into the work, recommends installation, methods and procedures, the Contractor shall submit this information along with the technical data, and observe strictly all such recommendations, which are not in conflict with the other requirements of these specifications. If a conflict is found with this specification, the Contractor shall immediately notify the Engineer in writing.

WARRANTY

The warranty is to be clearly stated. Warranty information is to be included in the Bidder's submittal.

SPECIFICATION SECTION

The data shall clearly demonstrate compliance with the Contract Plans and Specifications and shall relate to the specific material, equipment to be furnished, or process to be followed. Where manufacturer's standard drawings are employed, they shall be clearly marked to show what portions of the data are applicable to this project.

Submittal coordination is the responsibility of the Contractor. The responsibility shall not be delegated in whole or in part to subcontractors or suppliers.

All submittals (shop drawings and supporting data, catalogs, schedules, etc.), shall be submitted as the instruments of the Contractor, who shall be responsible for their accuracy and completeness. These submittals may be prepared by the Contractor, subcontractors, or suppliers, but the Contractor shall ascertain that submittals meet all of the requirements of the Contract Documents, while conforming to structural, space, and access conditions at the point of installation. The Contractor shall check all submittals before submitting them to the Engineer.

SPECIFIED OR "APPROVED EQUAL" ITEMS

Whenever catalog numbers and specific brands of trade names followed by the designation or "approved equal" are used in conjunction with a designated material, product, item, or service mentioned in these specifications, they are used to establish the standards of quality and utility required. Or "approved equal" proposals will be subject to acceptance by the Engineer.

PERMITS

City permits are required as applicable. All permit fees paid by the Contractor will be reimbursed by the City at cost.

LICENSE

Bidder must include Contractor's license number and date of expiration on the bid.

BUSINESS LICENSE

A City of Hayward Business License is required before starting work.

ENGINEER'S REVIEW

Allow fifteen (15) days, unless otherwise specified for the Engineer's review of submittals and re-submittals. Note that there are some different requirements for Construction Schedule submittals. No extension of time will be allowed through failure of the Contractor to either transmit submittals sufficiently in advance of the work or on account of re-submittals. Incomplete submittals will not be accepted and will be returned to the Contractor.

END OF SECTION

TECHNICAL SPECIFICATIONS
FOR
DIGESTER GAS TREATMENT SYSTEM MEDIA REPLACEMENT

Bidder shall provide all labor, equipment, material, mobilization, demobilization and superintendence to replace existing media for Digester Gas Treatment System Vessels.

A. DESCRIPTION/SCOPE OF WORK

1. Work Included: Furnish labor, services, materials, equipment, transportation, permits, fees, applicable taxes and others as necessary to complete the replacement of Digester Gas Treatment System media on a schedule to be determined by the City. Work shall include the following:
    a. Isolate and purge vessels with nitrogen prior to beginning work. Provide gas monitoring equipment to verify full system purge.
    b. Open Gas Treatment Vessels and remove interior contents of Gas treatment vessels.
    c. Allow time for City inspection and repair of vessel if necessary.
    d. Perform new media installation and reseal Gas Treatment Vessel.
        i. For Iron Sponge Media Replacement: Bid shall include providing **new screening material** to retain media on top of the existing FRP grating support layer inside the hydrogen sulfide vessels prior to installing new media.
    e. Media testing.
    f. Haul and dispose of the removed materials to an approved off-site disposal location.
    g. Provide all necessary labor, equipment and materials for supplying Nitrogen gas to purge and recharge the system after installing new media and before returning to service.
    h. Provide safety measures for all the work described herein, including confined space entry equipment and barricades around the site.
2. Media specs are included in the Attachments to this Request for Bids. Assume the following for media replacement volumes per vessel. In the event of discrepancy between this technical specification and the attachments, the technical specification shall govern.
    a. Iron Sponge Media: Assume each tank has 21,000 pounds of iron sponge material currently. Media replacement with iron sponge material shall assume 21,000 pounds of materials per vessel, or 420 cubic feet of media at 50 pounds per cubic foot. Media replacement depth per vessel shall be 6.6 feet minimum.
    b. Siloxane Vessel: Assume each tank has 3,300 pounds of activated carbon material currently. Media replacement shall assume 3,300 pounds of activated carbon per vessel, or 122.2 cubic feet of media at 27 pounds per cubic foot. Media replacement depth per vessel shall be 9.7 feet minimum.

B. SAFETY REQUIREMENTS

1. General: The BIDDER shall be solely and completely responsible for the safety of all persons and property, during the contract period. The BIDDER shall take necessary precautions to insure protection of the health and safety of human life and follow all confined space procedures. The City has identified the Gas Treatment Vessels as permit required confined spaces. The BIDDER shall meet the following safety requirements, but not be limited to:
    a. Monitoring and testing tank interior air quality continuously. All air sampling information shall be logged in a logbook. Interior air shall be tested for high gas levels of methane, carbon dioxide, hydrogen sulfide and lower explosion limit. If readings

exceed OSHA standards for a working environment, no one shall be allowed to enter or remain inside the vessel. The BIDDER shall provide proper ventilation to maintain OSHA quality standards. (H_2S < 10 PPM, CO < 25 PPM, LEL < 10% and oxygen content 19.5 to 21.9%).

   b. Fire and explosion hazards exist from high methane content digester gas. Gas safety measures shall be taken while working in or near the gas treatment vessels.

2. The BIDDER shall not allow the following materials and any other flammable type materials within twenty feet or inside a vessel and associated gas piping:
   a. Petroleum products.
   b. Flammable clothing.
   c. Sparking equipment or tools including boots with nails and tacks on soles.
   d. Welding equipment.
   e. Cigarettes and lighters.
   f. Non-explosion proof electrical equipment and motors.
   g. All safety related accidents shall be reported to the City as soon as possible.
   h. If hazardous materials are encountered, the BIDDER shall set up a decontamination system and develop procedures for using such a system.
3. Nuisance Conditions: The BIDDER shall take immediate steps to alleviate nuisance problems such as unsightly spills, odors and others as directed by the City. The BIDDER shall ensure that no hazardous condition relevant to basic hygiene protection, odors, vectors, unsightly spills, or explosive conditions will exist or develop that could be of concern to public and operator safety or health.
4. Hazardous Substances:
   a. If the BIDDER uses any hazardous substance to which the City employees may be exposed, the BIDDER shall supply to the City the trade name of the hazardous substance and a copy of the Safety Data Sheet (SDS).
   b. The BIDDER is cautioned that the Iron Sponge H_2S removal media may contain hazardous materials as defined by the State of California. The BIDDER shall be responsible for performing Waste characterization on the Iron sponge media removed under this contract and for comparison to California and EPA regulatory thresholds for hazardous waste in accordance with the methodology specified in Title 22 CCR Division 4.5. No additional compensation shall be provided to the Bidder for costs associated with the handling, waste characterization, or testing of the iron sponge or Sulfa Treat material in accordance with these regulations. All costs for waste characterization of the iron sponge material shall be included in the costs for replacement of the iron sponge media in bid item two (2). All costs for waste characterization of the Sulfa Treat material shall be included in the costs for replacement of the Sulfa Treat media in bid item three (3).
   c. For bidding purposes, the Bidder shall assume that the waste characterization will require a minimum of one sample per vessel of iron sponge material to be removed. The testing will include at a minimum an independent AIHA- and DTSC-accredited laboratory for analysis for "total" CAM l7 metals by ICP (inductively-coupled plasma), an additional round of testing for CA-soluble metals, and a third round of testing for EPA-soluble metals. The Bidder shall provide a certified industrial hygienist to provide a written interpretation of the results of said testing and recommendation of the appropriate disposal site for the material.
   d. If the iron sponge material is determined to be a CA-hazardous waste material or an EPA hazardous waste by the sampling and analysis performed by the Bidder then the

Bidder shall be compensated at the rate in the bid schedule for transporting and disposing of the iron sponge material at the rate established in the bid schedule for such hazardous waste. If the material is determined not to be a hazardous material the Bidder shall be compensated at the rate in the bid schedule for transporting and disposing of the iron sponge material at the rate established in the bid schedule for such non-hazardous waste.

5. Safety Equipment:
    a. Safety equipment provided shall include the items from the following list, but not be limited to:
    b. Explosion and oxygen deficiency meters
    c. Ladders with safety apparatus
    d. Self-contained breathing apparatus, or air line(s) extended inside the vessels
    e. Safety harness and tether rope
    f. Explosion-proof lights
    g. Explosion-proof ventilation fans
    h. Non-sparking tools

C. DIMENSIONS OF VESSELS

1. H2S Removal Vessels: The City has two stainless steel Digester Gas H2S Removal vessels of the dimensions as shown in the drawings provided in the attachments to this Request for Bid Package.
2. Siloxane Removal Vessels: The City has two stainless steel Digester Gas Siloxane Removal vessels of the dimensions as shown in the drawings provided in the attachments to this Request for Bid Package.
3. These vessels have been in continuous service since November of 2014. These treatment vessels are critical to the City's ability to operate its cogeneration system.

D. CONTRACT DURATION AND MEDIA REMOVAL TIME LINE

See General Conditions and Instructions to Bidders for contract duration and media removal/replacement time line.

E. PRODUCTS AND MATERIALS

1. Deliver all materials to the job site in new condition and with Bill of Lading. Submit Bill of Lading to Engineer upon delivery.
2. Bidder shall provide new unused replacement media for each gas treatment vessel. For the H2S removal vessel the Bidder shall provide Iron Sponge media compliant with the type and amount as provided for in the material specifications and manufacturer's installation instructions provided in the attachments to this Request for Bids. For media replacement with Iron Sponge material, Bidder shall include **new screening material** designed to retain the media on the existing FRP grating.
3. For the Siloxane Removal vessel the Bidder shall provide activated carbon media compliant with the type and amount as provided for in the material specifications and manufacturer's instructions provided in the attachments to this Request for Bids. All other materials, not specifically described but required for proper completion of the work specified herein, shall be provided by the BIDDER.

F. WORK REQUIREMENTS

1. Removal of the Vessel Contents:

a. BIDDER shall provide equipment for removal of the media from the gas treatment vessel on site. Bidder shall be responsible for containment on-site and proper transport and disposal of the used vessel media. The Bidder shall not store the used media on-site for more than seven (7) calendar days.
b. BIDDER shall notify the City for inspection of the vessel upon emptying the contents of the vessel.

2. Placement of new Media
    a. Bidder shall provide all labor, equipment and materials required to purge the gas treatment vessels, remove the existing media, install the new media, and reclose the vessel. The Bidders procedure shall be in compliance with the manufacturer's recommendation provided.
        i. For H2S Vessels: Include installation of media screening material on top of existing grating support at the bottom of the vessel.
    b. Place media in accordance with manufacturer's recommendations included in the attachments.
3. Hauling and Disposal of the Spent Media:
    a. The BIDDER shall haul the removed materials from the vessel to the disposal site. The BIDDER shall hold the City harmless in the event of any action occurring as a result of the BIDDER's hauling and disposal operations.
    b. The BIDDER shall dispose of the removed materials from the vessel at a permitted location.
    c. The BIDDER shall comply with all Local, State and Federal Regulations and Regional Water Quality Control Board Requirements, concerning the removal, hauling, and disposal of the removed materials specified herein.
    d. Hauling and disposal records shall be submitted to the City.
4. Cleanup:
    a. Maintain the project site in a clean and orderly condition at all times. Any spillage, debris or excess materials and equipment shall be cleaned up and removed from the plant site and not be washed into the plant drains.
    b. Upon completion of the work at each vessel, the BIDDER shall store all spent iron sponge materials in an enclosed container at location as directed by the City until such time as the waste characterization can be completed. All other equipment and materials shall be removed from the plant site within seven (7) calendar days.
        i. The Bidder may store the iron sponge materials on–site in an approved enclosed container for up to 30 days from the date the material is removed from the vessel. At the conclusion of the 30 days the iron sponge materials must be disposed of in accordance with this contract.
5. Non-Potable Water:
    a. An existing non-potable water source is located between the H2S vessels and the Siloxane vessels and is available free of charge for the BIDDER's use. This water is for the cleaning and wash-down purposes only. This water is from a potable water source that has gone through a back flow preventer and is therefore considered non-potable water, although the water is free of cross connections with non-potable sources that could degrade the water quality.
    b. The BIDDER shall provide at its own cost all hoses/piping, valves and fittings as required for cleaning and wash-down purposes.
6. Electrical Power

a. The City can provide 120V power from an electrical outlet inside the adjacent Warehouse Building approximately 100 feet from the worksite. If this one source of electrical service is insufficient for the Bidder's needs, then the BIDDER shall be responsible for obtaining a source of electrical power at the BIDDER's expense. The BIDDER is advised to bring in a generator if needed for electrical power if needed over and above the 120 volt service provided.

7. Access:
    a. BIDDER shall ensure that no obstruction to normal traffic patterns or access to the gas treatment system skid will exist at any time while performing the work.
    b. Access must be provided at all times for fats, oils, and grease (FOG) delivery trucks to pass by the area. BIDDER is cautioned that limited access exists at the media tank area for equipment and vehicular traffic. BIDDER shall review plans and photographs provided of the skid included in the Attachments to this Request for Bids.
    c. Walkways, driveways and passage ways shall be maintained in a manner that will not be a safety hazard to the plant personnel, or become an obstruction or interfere with Operations and Maintenance Staff in performing normal and routine tasks.

G. SUBMITTALS PRIOR TO COMMENCING OF THE WORK

1. Waste Characterization and test reports, including plans and permits for handling, transport, and disposal of the removed materials Stamped by a certified Industrial Hygienist.
2. Work schedule.
3. Site-specific health and safety plans. Submittals of health and safety plans are for record purposes only and shall not be reviewed.
4. Safety Data Sheets of hazardous substances brought onto the site by the Bidder
5. Product data and safety Data Sheets for proposed materials for media replacement.
6. City Review:
    a. Review of submittals by the City shall not relieve the BIDDER from responsibility for deviations from requirements specified herein, unless the BIDDER has in writing at the time of submission requested and received written approval from the City for specific deviations. Review of submittal information shall also not relieve the BIDDER from responsibility for errors or omissions in the submittal.

H. WARRANTY, WARRANTY REPAIRS AND GUARANTEE

1. BIDDER shall be responsible for all costs of warranty repair work including removal, shipping, reinstallation and re-startup during warranty period.
2. BIDDER shall warrant that upon completion the siloxane removal media and system shall remove siloxanes to less than 150 parts per billion volume (ppbv). If the removal requirement is not met, the BIDDER shall replace the siloxane media within thirty days at no additional cost to the City.
3. BIDDER shall warrant that upon completion the H2S removal media and system shall remove H2S to less than 0.2 parts per million volume (ppmv). If the removal requirement is not met, the BIDDER shall replace the H2S media within thirty days at no additional cost to the City.

END OF SECTION

BID FORM
for
BID #2303-080422
Digester Gas Treatment System Media Replacement
at
Water Pollution Control Facility

TO: THE CITY OF HAYWARD

FROM: _____
(Company name)

Pursuant and in compliance with your Instructions and Conditions and all other documents relating thereto, the undersigned offer or, having familiarized himself with the terms of the contract, the local conditions affecting the performance of the contract, the cost of the work at the place where the work is being done, and with the specifications and other contract documents, hereby proposed and agrees to perform within the time stipulated, in contract, including all of its component parts, and everything required to be performed, and to provide and furnish any and all of the labor, materials, tools, expandable equipment, and all utility and transportation services necessary to perform all of the work required in connection with **BID #2303-080422**, all in strict conformity with the specifications and other contract documents, including any addenda issued and on file at the Office of the Purchasing Manager of the City of Hayward.

BID PRICE:

The pricing provided in this section must include all charges, delivery, and equipment as specified including all taxes and costs for documentation, permits and fees, as may be applicable. All materials furnished including media must be new and unused. The City makes no guarantee of the quantities of any of the following bid items. It is expected that some of the bid items will not be utilized at all however the following quantities will be utilized in determining the lowest responsive bidder. The exact quantity of bid items utilized will be determined by the City at its sole discretion after award of the contract and by written notice of the City over the duration of the two-year contract. The Contractor shall receive no compensation for unused quantities of each or any of the bid items.

ITEM PRICE SCHEDULE SHEET

Item No.	Qty.	Description	Unit Price	Extended Price
001	5 ea.	Replace Media in one Siloxane Removal Vessel inclusive of all costs including hauling and disposal of spent media.	$_____	$_____
002	5 ea.	Replace new Iron Sponge Media in one H2S Removal Vessel with new Iron Sponge Media material exclusive of all costs including hauling and disposal of spent media.	$_____	$_____
003	5 ea.	Hauling and disposal costs for one H2S Removal Vessel volume of existing Iron Sponge material which is determined to contain no hazardous materials.		
004	5 ea.	Hauling and disposal costs for one H2S Removal Vessel volume of existing Iron Sponge or Sulfa Treat material which is determined to contain CA hazardous materials.	$_____	$_____
005	5 ea.	Hauling and disposal costs for one H2S Removal Vessel volume of existing Iron Sponge or Sulfa Treat material which is determined to contain EPA hazardous materials.	$_____	$_____
TOTAL BASE BID (LUMP SUM TOTAL OF BID ITEMS 1 THROUGH 5)			$_____	

THE REPRESENTATIVES MADE HEREIN ARE MADE UNDER PENALTY OF PERJURY.

CONTRACTOR'S LICENSE

Licensed in accordance with the act providing for the registration of the registration of contractor's, License No. _____.

_____ _____

(Expiration Date) (Proper Name of Bidder)

NO BID IS VALID UNLESS SUBMITTED ON THIS FORM AND SIGNED BY AUTHORIZED AGENT FOR YOUR COMPANY.

SUBMITTED BY:

COMPANY NAME: _____

ADDRESS: _____

CITY: _____ STATE: ____ ZIP: _____

TELEPHONE: _____

EMAIL: _____

SIGNATURE: _____
(Authorized Agent)

NAME: _____
(Please Print)

TITLE: _____

DATE: _____

NOTE: If bidder is a corporation, the legal name of the corporation shall be set forth above, together with the signature of authorized officers or agents; if bidder is a partnership, the true name of the firm shall be set forth above, together with the signature of the partnership; and if bidder is an individual, his signature shall be placed above.

THIS DOCUMENT MUST BE COMPLETED, EXECUTED AND SUBMITTED WITH THE BID FORM

BIDDER'S REFERENCE AND STATEMENT OF EXPERIENCE

The bidder is required to state below work of similar character to that included in the proposed contract he has done and provide references which will-fully disclose his responsibility, experience, skill and business standing. Please list below your qualified commercial references:

_____
Company Name
_____
Contact
_____
Address
_____
Telephone Number

Brief Description of Project:
_____
_____
_____

_____
Project Completion (date)
$_____
Amount of Contract

_____
Company Name
_____
Contact
_____
Address
_____
Telephone Number

Brief Description of Project:
_____
_____
_____

_____
Project Completion (date)
$_____
Amount of Contract

_____
Company Name
_____
Contact
_____
Address
_____
Telephone Number

Brief Description of Project:
_____
_____
_____

_____
Project Completion (date)
$_____
Amount of Contract

_____
Company Name
_____
Contact
_____
Address
_____
Telephone Number

Brief Description of Project:
_____
_____
_____

_____
Project Completion (date)
$_____
Amount of Contract

THIS DOCUMENT MUST BE COMPLETED, EXECUTED AND SUBMITTED WITH THE BID FORM

DESIGNATION OF SUBCONTRACTORS

In compliance with the provisions of the Government Code of the State of California each bidder shall set forth below the name and the mill, shop, or office of each subcontractor who will perform work or labor or render service to the Contractor in or about the construction of the work or improvement to be performed under these specifications and the portion of the work which will be done by each subcontractor.

If the Contractor fails to specify a subcontractor for any portion of the work to be performed under the contract, he shall be deemed to have agreed to perform such portion himself, and he shall not be permitted to subcontract that portion of the work under the conditions hereinafter set forth.

Subletting or subcontracting of any portion of the work as to which no subcontractor was designated in the original bid shall only be permitted in cases of public emergency or necessity, and then only after a finding reduced to writing as a public record of the legislative body of the CITY.

TRADE	NAME	CONTRACTOR'S LICENSE NUMBER	EXPIRATION DATE

THE REPRESENTATIONS MADE HEREIN ARE MADE UNDER PENALTY OF PERJURY.

THIS DOCUMENT MUST BE COMPLETED, EXECUTED AND SUBMITTED WITH THE BID FORM

ACKNOWLEDGMENT OF ADDENDA

Failure to execute the following may be considered as an irregularity in the bid. Receipt of the following addenda issued during the time of bidding is acknowledged, and the information contained therein has been considered in the preparation of this bid:

[ ] None	[ ] No. 3
[ ] No. 1	[ ] No. 4
[ ] No. 2	[ ] No. 5

(Check Appropriate Space(s) for Addenda Received)

WARNING

If an addendum or addenda have been issued by the City and not noted above as being received by the bidder, this Proposal may be rejected.

THIS DOCUMENT MUST BE COMPLETED, EXECUTED AND SUBMITTED WITH THE BID FORM

NONCOLLUSION AFFIDAVIT TO BE EXECUTED BY BIDDER AND SUBMITTED WITH BID.

State of California)
) ss.
County of_____)

_____, being first duly ;sworn, deposes and says that he or she is of _____ the party making the foregoing bid that the bid is not made in the interest of or on behalf of, any undisclosed person, partnership, company, association, organization, or corporation; that the bid is genuine and not collusive or sham; that the bidder as not directly or indirectly induced or solicited any other bidder to put in a false or sham bid, and has not directly or indirectly colluded, conspired, connived, or agreed with any bidder or anyone else to put in a sham bid, or that anyone shall refrain from bidding; that the bidder has not in any manner, directly or indirectly sought by agreement, communication, or conference with anyone to fix the bid price of the bidder or any other bidder or to fix any overhead, profit, or cost element of the bid price, or of that of any other bidder or t secure any advantage against the public body awarding the contract of anyone interested in the proposed contract; that all statements contained in the bid are true; and further, that the bidder has not, directly or indirectly, submitted his or her bid price of any breakdown thereof, or the contents thereof, or divulged information or data relative thereto, or paid, and will not pay, any fee to any corporation, partnership, company association, organization, bid depository, or to any member or agent thereof to effectuate a collusive or sham bid.

NO BID IS VALID UNLESS SIGNED BY THE PERSON MAKING THE BID

SIGNATURE:_____

PRINT NAME: _____

DATE: _____

THIS DOCUMENT MUST BE COMPLETED, EXECUTED AND SUBMITTED WITH THE BID FORM

CONTRACTOR'S CERTIFICATE
REGARDING WORKER'S COMPENSATION

LABOR CODE SECTION 3700

"Every employer except the State and all political subdivisions or institutions thereof, shall secure the payment of compensation in one or more of the following ways:

(a) By being insured against liability to pay compensation in one or more insurers duly authorized to write compensation insurance in this State.

(b) By securing from the Director of Industrial Relations a certificate of consent to self-insure, which may be given upon furnishing proof satisfactory to the City of Industrial Relations of ability to self-insure and to pay any compensation that may become due to this employees.'

I am aware of the provisions of Section 3700 of the Labor Code which require every employer to be insured against liability for worker's compensation or to undertake self-insurance in accordance with the provisions of that code, and I will comply with such provisions before commencing the performance of this contract.

SIGNATURE: _____

Print Name: _____

Date: _____

(In accordance with Article 5 [commencing at Section 1860], Chapter I, Part 7, Division 2 of the Labor Code, the above certificate must signed and filed with the awarding body prior to performing any work under this contract.)

CITY OF HAYWARD
NONDISCRIMINATORY EMPLOYMENT PRACTICES PROVISION

In the performance of this contract the contractor or subcontractor **agrees as follows:**

1. AFFIRMATIVE ACTION - GENERAL. The contractor or subcontractor shall not discriminate against any applicant for employment or employee on the grounds of race, color, religion, national origin, ancestry, place of birth, sex, sexual orientation, age, or disability. The contractor or subcontractor will take affirmative action to ensure that its recruitment, selection, and evaluation practices do not discriminate against any applicant for employment or employee. The contractor or subcontractor shall also ensure that its personnel policies, practices and procedures, including but not limited to, the transfer, promotion, demotion, suspension, layoff, or termination, rates of pay or other forms of compensation, and the selection for training programs, apprenticeship, and on-the-job training do not discriminate against any employee. The contractor or subcontractor shall post in conspicuous places that are accessible to applicants for employment and employees notices setting forth this Nondiscriminatory Employment Practices Provision.

2. RECRUITMENT.

(a) Non-union employees. Advertising placed with any media shall include the notation, "An Equal Opportunity Employer." Advertisements shall be placed with media having large circulation among minority groups or at school placement centers having large minority student enrollments. The contractor or subcontractor will send to each source of employee referrals, other than labor unions or workers' representatives, a notice, in such form and content as shall be furnished or approved by the City, advising such source of employee referrals of its commitments under Chapter 2, Article 7, of the Hayward Municipal Code, and shall post copies of the notices in conspicuous places available to employees and applicants for employment.

Recruitment of non-union employees shall, to the maximum extent possible, utilize the services of minority organizations likely to be referral sources for minority group employees.

(b) Union employees. Union employees shall be recruited in accordance with applicable labor agreements. The contractor or subcontractor shall send to each labor union or representative of workers with which he has a collective bargaining agreement or other contract or understanding, a notice, in such form and content as shall be furnished or approved by the City, advising said labor union or workers' representatives of its commitments under Chapter 2, Article 7, of the Hayward Municipal Code, and shall post copies of the notice in conspicuous places available to employees and applicants for employment. The contractor or subcontractor agrees to seek the inclusion in all union agreements to which it is a party, clauses prohibiting discrimination based upon race, color, religion, national origin, ancestry, place of birth, sex, sexual orientation, age, or disability. To the maximum extent consistent with applicable labor agreements the contractor or subcontractor will attempt to recruit applicants without regard to race, color, religion, national origin, sex, age, or disability.

3. EQUAL EMPLOYMENT OPPORTUNITY OFFICER. The contractor or subcontractor shall designate one of its management employees as its Equal Employment Opportunity Officer and shall assign such officer the responsibility and authority to administer and promote an active program to put the contractor's or subcontractor's nondiscriminatory employment practices commitment into practice.

4. ACCESS TO RECORDS. The contractor or subcontractor shall permit access during normal business hours to its records of employment, employment advertisements, completed application forms, and other pertinent data and records when requested to do so by the City Manager or any representative of the Fair Employment Practices Commission of the State of California.

5. COMPLIANCE REVIEW PROCEDURES.

(a) The contractor or subcontractor shall, upon request of the City Manager, submit its official payroll records together with a monthly cumulative summary of all employee hours worked in performance of its contract with or on behalf of the City identified as to minority status.

(b) The contractor or subcontractor shall submit to a formal, thorough review of its records, books, reports, and accounts concerning its employment practices for the purpose of determining whether they are nondiscriminatory. This review will be performed at intervals during the performance of the contract as may be specified by the City Manager.

Each review shall be followed within 30 days by either a written notice to the contractor or subcontractor that it is in apparent compliance with the Nondiscriminatory Employment Practices Provision of its contract or by a citation of apparent deficiency, summary of findings, and a statement of remedial commitment for signature by the contractor. If the contractor or subcontractor fails to meet the commitments it has made in executing such statement, the City Manager shall issue a notice of intent to initiate an action against the contractor or subcontractor with the Fair Employment Practices Commission for willful violation of the Nondiscriminatory Employment Practices Provision and the California Fair Employment Practices Act in not less than 30 days of such notice of intent.

6. VIOLATIONS. The City Manager shall deem a finding of willful violation of the Nondiscriminatory Employment Practices Provision and the California Fair Employment Practices Act to have occurred upon receipt of written notice from the Fair Employment Practices Commission that it has investigated and determined that the contractor or subcontractor has violated the Fair Employment Practices Act and has issued an order under Labor Code Section 1426, which has become final, or obtained relief under Labor Code Sections 1429 and 1429.1, or an appropriate federal commission or agency, or a court of the State of California, or if the United States Government finds, in any action or proceeding to which the contractor or subcontractor is a party, that it discriminated against employees or applicants for employment in the performance of this contract. Upon receipt of such notice or final judgement, the City Manager shall notify the contractor or subcontractor that unless it demonstrates to the satisfaction of the City Council within a stated reasonable period that the violation has been corrected, said contractor or subcontractor shall be subject to the remedies hereinafter provided.

7. REMEDIES FOR WILLFUL VIOLATION. The contractor or subcontractor agrees that a finding of a willful violation of the California Fair Employment Practices Act or of this Nondiscriminatory Employment Practices Provision shall be regarded by the City Council as a basis for determining whether or not it is a responsible bidder as to future contracts for which such contractor or subcontractor may submit bids. The contractor or subcontractor further agrees that such disqualification by said City Council shall remain in effect for one year or until it demonstrates to the satisfaction of the City Manager that its employment practices are in conformity with the nondiscrimination provisions of the article.

The contractor or subcontractor further agrees that the contractor or subcontractor shall, as a penalty to the City of Hayward, forfeit for each calendar day or portion thereof an amount not to exceed $250 or 1 percent of the total contract amount, whichever is greater. Such penalty may be deducted from any sums due to the contractor or subcontractor or recovered by the City through maintenance of an action in any court of competent jurisdiction.

Prior to making any determination with respect to reinstatement of a contractor or subcontractor as a responsible bidder, the City Council may refer the matter to the Human Relations Commission of the City of Hayward for a report and recommendation. The contractor or subcontractor agrees to cooperate to the fullest extent with said Human Relations Commission in it exercise of the authority here conferred, including, but not limited to, promptly furnishing reports requested by the commission's review of matters relating to such reinstatement.

(REV. 11/5/92)

CITY OF HAYWARD
SPECIAL AFFIRMATIVE ACTION PROVISION FOR SUPPLY AND SERVICE CONTRACTS

In accordance with section 2-7.04 of the Hayward Municipal Code (HMC), this provision shall be included in every nonconstruction contract estimated by the City to equal or exceed $10,000 annually, where the contract has a potential for more than one delivery on City request and the Contractor employs more than ten (10) persons, and for every other nonconstruction contract equal to or in excess of $25,000 (whether paid in one sum upon delivery or completion, or paid periodically and such periodical payments are estimated by the City to total $25,000 or more in one year) the following requirements must be met in addition to those set out in The City of Hayward Nondiscriminatory Employment Practices Provision (Sec. 2-7.02, HMC):

1. IN THE PERFORMANCE OF THIS CONTRACT, THE CONTRACTOR AGREES AS FOLLOWS:

(a) The contractor that submits the apparent low bid shall, on behalf of itself and those of its subcontractors, if any, where the dollar amount of such subcontract exceeds $10,000, furnish the City Manager such information concerning its employment practices and existing and projected work forces in the form and manner as may be requested by the City Manager.

(b) The contractor that submits the apparent low bid and each of its subcontractors, if any, where the dollar amount of such subcontract is $10,000 or more, may be required to attend a conference with the City Manager at such time and place as may be fixed by the City Manager to determine whether the information earlier submitted shows compliance with the nondiscrimination requirements of this article.

In making such determination, the City Manager shall consider the following factors:

(1) The size of the contractor's or subcontractor's existing work force;

(2) The size of the anticipated work force necessary for the contractor or subcontractor to perform the contract or subcontract for or on behalf of the City;

(3) The projected turnover, vacancies, or work force expansion that the contractor or subcontractor expects to occur during the term of the contract;

(4) The specific plans of the contractor or subcontractor to recruit applicants for employment and to select, train, and promote employees hired to complete the contract with or on behalf of the City in like proportion to their numbers in the contractor's or subcontractor's typical, geographic labor market;

(5) An analysis showing the projected work force that would be expected, after all necessary selection is completed, to perform the contract or subcontract with or on behalf of the City absent any discriminatory employment practices;

(6) Any other qualitative or quantitative data which would assist the City Manager in determining the contractor's or subcontractor's commitment to meet the nondiscriminatory employment practices requirements of this contract.

(c) Following such conference, the apparent low bidder shall enter into a memorandum of understanding with the City in a form agreed to by such contractor and the City Manager, which memorandum of understanding shall set forth the measures that the contractor and its subcontractors who have attended the conference shall take in furthering and meeting its nondiscrimination employment practices commitment during the performance of the contract.

(d) In the event the apparent low bidder fails to submit the requested written information, appear at the conference, or enter into a memorandum of understanding that is acceptable to the City Manager, the City Manager shall, after giving notice and an opportunity to respond to the apparent low bidder, contact the second lowest bidder for the purpose of conducting the procedure set out in subsections (a) through (c) herein.

2. IMPLEMENTING RULES AND REGULATIONS, ENFORCEMENT PROCEDURE, AND DELEGATION OF RESPONSIBILITY. (Sec. 2-7.05, HMC)
The City Manager shall promulgate all rules, regulations, and forms necessary to implement the provisions of this article. So far as is practical, such rules, regulations, and forms shall be similar to those adopted pursuant to federal Executive Order 11246 and the Fair Employment Practices Act of the State of California.

The City Manager shall monitor the performance of the contractors and subcontractors in their achievement of the nondiscriminatory employment practices requirements provided herein, conduct on-site inspection of their work forces and employment records and submit periodic reports on such performances to the City Council and Human Relations Commission for advisory review to the City Council regarding modifications of this article so as to ensure its effectiveness.

The City Manager shall designate a Contract Compliance Officer and may, at his discretion, delegate responsibility and authority for administering the provisions of this article to the Contract Compliance Officer and to such other officers or employees of the City as necessary for proper administration of this program.

3. EXEMPTIONS. (Sec. 2-7.06, HMC)
The following contracts are exempt from the provisions of this article:

(a) Contracts with other governmental jurisdictions;

(b) Contracts with manufacturers whose principal place of business is located outside the United States;

(c) Contracts with the United States manufacturers whose principal place of business is located outside the State of California;

(d) Contracts with any single or sole source supplier of any goods or service; and

(e) Contracts resulting from exigent emergency requisitions where any delay in completion or performance of the contract would jeopardize the public health, safety, or welfare of the citizens of the City of Hayward, or where in the judgement of the City Manager the operational effectiveness of a significant City function would be significantly threatened if the contract were not entered into expeditiously.

4. CONTRACTS SUBJECT TO EXECUTIVE ORDER 11246. (Sec. 2-7.07, HMC)
No provision of this article shall be construed to apply to any federally assisted construction contract entered into by the City that is subject to Executive Order 11246 or any order amending or superseding Executive Order 11246, the rules and regulations promulgated pursuant to said order, or the Federal Equal Employment Opportunity Bid Conditions for Alameda County.

5. OTHER REMEDIES. (Sec. 2-7.08, HMC)
The provisions of this article shall not be construed to prevent the City from pursuing and obtaining any remedy or relief as may be prescribed by law.

6. CONTACT
City of Hayward Purchasing and Contract Compliance Specialist, (510) 583-4802.

(rev. 06/26/02)

HAYWARD

NONDISCRIMATORY EMPLOYMENT PRACTICES
AND
AFFIRMATIVE ACTION CERTIFICATION STATEMENT

The Respondent to a City of Hayward Request for Proposals/Request for Quotation hereby certifies that it is in compliance with all executive orders, federal and state laws regarding fair employment practices and nondiscrimination in employment.

1. That it shall demonstrate compliance with the requirements established in the Affirmative Action provisions (EEO) for supply and services contracts.

2. That it fully understands that the provisions contained in the City's special Affirmative Action provisions shall be considered a part of its contractual agreement with the City in the event of award of contract.

3. That it is in compliance with all executive orders, federal, state and local laws (including Hayward Municipal Code Chapter 2, Article 7) regarding fair employment practices and nondiscrimination in employment.

_____ _____
(Print/Type Name of Company Official) (Title)

_____ _____
(Signature of Company Official) (Date)

Name of Project: _____

Name of Firm: _____

Address: _____
Street Address City/State/Zip

Telephone: (___) _____ (___)_____

Please check below as appropriate:

( ) Prime Contractor ( ) Subcontractor ( ) Professional Services

( ) Supplier of Goods ( ) Supplier of Services

HAYWARD

AFFIRMATION ON NON-INVOLVEMENT IN DEVELOPMENT OF PRODUCTION OF NUCLEAR WEAPONS

The undersigned hereby certifies:

That it understands that City of Hayward Ordinance No.87024 C.S. prohibits award of contract to, or purchase of goods or services from, "any person which is knowingly or intentionally engaged in the development or production of nuclear weapons."

That it understands the ordinance defines "Nuclear Weapon" as "any device the intended explosion of which results from the energy released by fission or fusion reactions involving atomic nuclei."

That it understands the ordinance defines "Person" as "any person, private corporation, institution or other entity..."

As the owner or company official of the firm identified below, I affirm that this company is not knowingly or intentionally engaged in such development or production.

Print/Type Company Name	Print/Type Official Name & Title
Company Address	Signature of Company Official
City/State/Zip Code	Date

Department of Finance
Purchasing Division

777 B Street • Hayward • CA • 94541-5007
Tel: 510-583-4800 • Fax: 510-583-3600 • Website: www.hayward-ca.gov

Attachment A

BOND NO._____
PROJECT NO. _____
BID #2303-080422

LABOR AND MATERIALS BOND

KNOW ALL PERSONS BY THESE PRESENTS:

THAT WHEREAS, the City of Hayward (hereinafter referred to as "City") has awarded to _____ (hereinafter referred to as "Contractor") an agreement for RFP INDUSTRIAL PEDESTRIAN BRIDGE DECK REPLACEMENT_(hereinafter referred to as the "Project").

WHEREAS, and the work to be performed by the Contractor is more particularly set forth in the Contract Documents for the Project dated _____, (hereinafter referred to as "Contract Documents"), the terms and conditions of which are expressly incorporated herein by reference; and

WHEREAS, the Contractor is required by said Contract Documents to perform the terms thereof and to furnish a bond for labor performed and materials furnished for the aforesaid work and for amounts due under the Unemployment Insurance Act of the State of California with respect to such work,

NOW THEREFORE, we, _____, the undersigned Contractor, and _____, as Surety, a corporation organized and duly authorized to transact business under the laws of the State of California, are held and firmly bound to all persons furnishing any materials or supplies used in, upon, for, or about the performance of the aforesaid work under the aforesaid contract, and all persons performing any work or labor of any kind thereon, and all persons entitled to receive any sums of money due under the Unemployment Insurance Act of the State of California with respect to such work or labor, and all other persons, if any, entitled to file claims under Title 15 (commencing with Section 3082), Part 4, Division 3, of the Civil Code of the State of California with respect to such materials, supplies, work, or labor, unto the City in the sum of _____ dollars, ($_____),said sum being not less than one hundred percent (100%) of the total amount of the Contract, for which amount well and truly to be made, we and each of us bind ourselves, our heirs, executors and administrators, successors and assigns, jointly and severally, firmly by these presents.

THE CONDITION OF THIS OBLIGATION IS SUCH, that, if the Contractor, his or its subcontractors shall fail to pay for any materials or supplies used in, upon for or about the performance of the aforesaid work under the aforesaid contract or for any work or labor of any kind thereon, or for any sums of money due under the Unemployment Insurance Act of the State of California with respect to such work or labor, or for any sums of money due persons entitled to file claims under Title 15 (commencing with Section 3082), Part 4, Division 3, of the Civil Code of the State of California with respect to such materials, supplies, work, or labor, the aforesaid Surety will pay the same in an amount not to exceed the sum of this bond specified above.

As a part of the obligation secured hereby and in addition to the face amount specified therefore, there shall be included costs and reasonable expenses and fees including reasonable attorney's fees, incurred by City in enforcing such obligation.

As a condition precedent to the satisfactory completion of the Contract Documents, unless otherwise provided for in the Contract Documents, the above obligation shall hold good for a period of one (1) year after the Acceptance of the Work by City, during which time if Contractor shall fail to make full, complete, and satisfactory repair and replacements and totally protect the City from loss or damage resulting from or caused by defective materials or faulty workmanship. The obligations of Surety hereunder shall continue so long as any obligation of Contractor remains. Nothing herein shall limit the City's rights or the Contractor of Surety's obligations under the Contract, law or equity, including, but not limited to, California Code of Civil Procedure Section 337.15.

Whenever Contractor shall be, and is declared by the City to be, in default under the Contract Documents, the Surety shall remedy the default pursuant to the Contract Documents, or shall promptly, at the City's option:

1) Take over and complete the Project in accordance with all terms and conditions in the Contract Documents;
2) Obtain a Bid or Bids for completing the Project in accordance with all terms and conditions in the Contract Documents and upon determination by Surety of the lowest responsive and responsible Bidder, arrange for a Contract between such Bidder, the Surety and the City, and make available as work progresses sufficient funds to pay the cost of completion of the Project, less the balance of the Contract price, including other costs and damages for which Surety may be liable. The term "balance of the Contract price" as used in this paragraph shall mean the total amount payable to Contractor by the City under the Contract and any modification thereto, less any amount previously paid by the City to the Contractor and any other set offs pursuant to the Contract Documents;
3) Permit the City to complete the Project in any manner consistent with California law and make available as work progresses sufficient funds to pay the cost of completion of the Project, less the balance of the Contract price, including other costs and damages for which Surety may be liable. The term "balance of the Contract price" as used in this paragraph shall mean the total amount payable to Contractor by the City under the Contract and any modification thereto, less any amount previously paid by the City to the Contractor and any other set offs pursuant to the Contract Documents.

Surety expressly agrees that the City may reject any contractor or subcontractor which may be proposed by Surety in fulfillment of its obligations in the event of default by the Contractor.

Surety shall not utilize Contractor in completing the Project nor shall Surety accept a Bid from Contractor for completion of the Project if the City, when declaring the Contractor in default, notifies Surety of the City's objection to Contractor's further participation in the completion of the Project.

The Surety, for value received, hereby stipulates and agrees that no change, extension of time, alteration, or addition to the terms of the Contract Documents or to the Project to be performed thereunder shall in any way affect its obligations on this bond, and it does hereby waive notice of any such change, extension of time, alteration or addition to the terms of the Contract Documents or to the Project.

IN WITNESS WHEREOF, two (2) identical counterparts of this instrument, each of which shall for all purposes be deemed an original thereof, have been duly executed by the Contractor and Surety above named on the _____ day of _____ 201__ the name and corporate seal of each corporate party being hereto affixed and these presents duly signed by its undersigned representative pursuant to authority of its governing body.

PRINCIPAL/CONTRACTOR:		**SURETY:**
[Name of Contractor]		[Name of Surety]
Signature		Signature of Attorney-In-Fact
[Name]		[Name of Attorney-In-Fact]
[Title]		
SEAL		SEAL

NOTE: A copy of the Power-of-Attorney to local representatives of the bonding company must be attached hereto.

BOND NO._____
PROJECT NO. _____
BID #2303-080422

PERFORMANCE BOND

KNOW ALL PERSONS BY THESE PRESENTS:

THAT WHEREAS, the City of Hayward (hereinafter referred to as "City") has awarded to _____ (hereinafter referred to as "Contractor") an agreement for RFP INDUSTRIAL PEDESTRIAN BRIDGE DECK REPLACEMENT_(hereinafter referred to as the "Project").

WHEREAS, and the work to be performed by the Contractor is more particularly set forth in the Contract Documents for the Project dated _____, (hereinafter referred to as "Contract Documents"), the terms and conditions of which are expressly incorporated herein by reference; and

WHEREAS, the Contractor is required by said Contract Documents to perform the terms thereof and to furnish a bond for faithful performance of said Contract Documents.

NOW THEREFORE, we, _____, the undersigned Contractor, and _____, as Surety, a corporation organized and duly authorized to transact business under the laws of the State of California, are held and firmly bound unto the City in the sum of _____ dollars, ($_____),said sum being not less than one hundred percent (100%) of the total amount of the Contract, for which amount well and truly to be made, we and each of us bind ourselves, our heirs, executors and administrators, successors and assigns, jointly and severally, firmly by these presents.

THE CONDITION OF THIS OBLIGATION IS SUCH, that, if the Contractor, his or its heirs, executors, administrators, successors or assigns, shall in all things stand to and abide by, and well and truly keep and perform the covenants, conditions and agreements in the Contract Documents and any alteration thereof made as therein provided, on its part, to be kept and performed at the time and in the manner therein specified, and in all respects according to their intent and meaning; and shall faithfully fulfill all obligations including the one-year guarantee of all materials and workmanship; and shall indemnify, defend and save harmless the City, its officers and agents, as stipulated in said Contract Documents, then this obligation shall become null and void; otherwise it shall be and remain in full force and effect.

As a part of the obligation secured hereby and in addition to the face amount specified therefore, there shall be included costs and reasonable expenses and fees including reasonable attorney's fees, incurred by City in enforcing such obligation.

As a condition precedent to the satisfactory completion of the Contract Documents, unless otherwise provided for in the Contract Documents, the above obligation shall hold good for a period of one (1) year after the Acceptance of the Work by City, during which time if Contractor shall fail to make full, complete, and satisfactory repair and replacements and totally protect the City from loss or damage resulting from or caused by defective materials or faulty workmanship. The obligations of Surety hereunder shall continue so long as any obligation of Contractor remains. Nothing herein shall limit the City's rights or the Contractor of Surety's obligations under the Contract, law or equity, including, but not limited to, California Code of Civil Procedure Section 337.15.

Whenever Contractor shall be, and is declared by the City to be, in default under the Contract Documents, the Surety shall remedy the default pursuant to the Contract Documents, or shall promptly, at the City's option:

1) Take over and complete the Project in accordance with all terms and conditions in the Contract Documents;
2) Obtain a Bid or Bids for completing the Project in accordance with all terms and conditions in the Contract Documents and upon determination by Surety of the lowest responsive and responsible Bidder, arrange for a Contract between such Bidder, the Surety and the City, and make available as work progresses sufficient funds to pay the cost of completion of the Project, less the balance of the

Contract price, including other costs and damages for which Surety may be liable. The term "balance of the Contract price" as used in this paragraph shall mean the total amount payable to Contractor by the City under the Contract and any modification thereto, less any amount previously paid by the City to the Contractor and any other set offs pursuant to the Contract Documents;

3) Permit the City to complete the Project in any manner consistent with California law and make available as work progresses sufficient funds to pay the cost of completion of the Project, less the balance of the Contract price, including other costs and damages for which Surety may be liable. The term "balance of the Contract price" as used in this paragraph shall mean the total amount payable to Contractor by the City under the Contract and any modification thereto, less any amount previously paid by the City to the Contractor and any other set offs pursuant to the Contract Documents.

Surety expressly agrees that the City may reject any contractor or subcontractor which may be proposed by Surety in fulfillment of its obligations in the event of default by the Contractor.

Surety shall not utilize Contractor in completing the Project nor shall Surety accept a Bid from Contractor for completion of the Project if the City, when declaring the Contractor in default, notifies Surety of the City's objection to Contractor's further participation in the completion of the Project.

The Surety, for value received, hereby stipulates and agrees that no change, extension of time, alteration, or addition to the terms of the Contract Documents or to the Project to be performed thereunder shall in any way affect its obligations on this bond, and it does hereby waive notice of any such change, extension of time, alteration or addition to the terms of the Contract Documents or to the Project.

IN WITNESS WHEREOF, two (2) identical counterparts of this instrument, each of which shall for all purposes be deemed an original thereof, have been duly executed by the Contractor and Surety above named on the _____ day of _____ 201__ the name and corporate seal of each corporate party being hereto affixed and these presents duly signed by its undersigned representative pursuant to authority of its governing body.

PRINCIPAL/CONTRACTOR:		**SURETY:**
[Name of Contractor]		[Name of Surety]
Signature		Signature of Attorney-In-Fact
[Name]		[Name of Attorney-In-Fact]
[Title]		
SEAL		SEAL

NOTE: A copy of the Power-of-Attorney to local representatives of the bonding company must be attached hereto.

Attachment B

CITY OF HAYWARD
GENERAL PROVISIONS FOR PURCHASES OF WORK AND SERVICES

If these general provisions are incorporated by reference into a Purchase Order for work and/or services, all references to "Bidder" or "Successful Bidder" shall be construed to mean the Seller from whom work and services are purchased by the City. The work and services described in the accompanying Request for Quotation or Purchase Order hereinafter shall be designated as "The Work".

1.00 Legal Relations and Responsibilities

1.01 Laws to be Observed: The Bidder shall keep itself fully informed of all existing and future State and Federal laws, including O.S.H.A. standards, and all municipal ordinances and regulations of the City of Hayward which in any manner affect those engaged or employed in The Work or the materials used in The Work, or which in any way affect the conduct of The Work, and of all such orders and decrees of bodies or tribunals having any jurisdiction or authority over the same.

1.02 Labor Discriminations: No discrimination shall be made in employment of persons upon The Work because of the race, color or religion of such persons, and any Successful Bidder which violates this Section is subject to all the penalties imposed for a violations of Chapter 1, Part 7, Division 2, of the Labor Code of the State of California in accordance with the provisions of Section 1735 thereof.

1.03 Prevailing Wage: The Successful Bidder hereby stipulates that Sections 1771 and 1777.5 of the Labor Code of the State of California shall be complied with and shall forfeit as a penalty to the City of Hayward not more than fifty dollars ($50.00) for each calendar day or portion thereof for each worker paid less than the general prevailing rates of per diem wages as determined by the Department of Industrial Relations for such work or craft in which such worker is employed on The Work in violation of the Labor Code of the State of California, in particular the provisions of Sections 1770 to 1780, Inclusive, thereof.

Copies of the general prevailing wage rates are on file in the office of the City Engineer and are available to any interested parties on request.

1.03.1 Certified Payroll Records: Bidder shall maintain certified payroll records as required by Section 1776 of the Labor Code. Copies of certified payroll records shall be provided to the City of Hayward within ten (10) days of written request by the City. Failure to provide copies of certified payroll within the time prescribed by statute shall result in imposition of monetary penalties or withholding of progress payments due under the contract.

1.04 Permits and Licenses: Any person doing business in the City of Hayward is required by Chapter 8, Section 1 of the Municipal code to pay a business license tax. The successful bidder shall have or procure a business license and, prior to initiation of work, show evidence thereof to the Revenue Department. The successful bidder shall, in addition, procure all permits, pay all charges and fees and give all notices necessary and incidental to the due and lawful prosecution of The Work.

1.05 Encroachment Permit: The Successful Bidder shall obtain and/or comply with any encroachment permits as set forth in the order.

1.06 Patents: The Successful Bidder shall assume all responsibilities arising from the use of patented materials, equipment, devices, or processes used on or incorporated in The Work.

1.07 Public Convenience and Safety: Attention is directed to all applicable Sections of Chapter 7, Article 2, STREETS, "Disturbance of Streets," of the City of Hayward Municipal Code.

Traffic control procedures stated herein and traffic control standard plans shall be the MINIMUM accepted in the City of Hayward. Any variations shall be approved by the Engineer prior to use. In no way shall compliance with these specifications and standards relieve the Successful Bidder of any liability for claims or damages arising from his work.

All streets within the project limits shall remain open to traffic at all times during the construction period. Between the hours of 5:00 PM and 8:00 AM, all lanes remain open to traffic.
Adequate traffic warning and control devices shall be provided and maintained by the Successful Bidder during the construction period in accordance with the "State of California Manual of Warning Signs, Lights and Devices for Use In Performance of Work upon Highways" dated 1973. When inadequate traffic warning and control devices have been installed, the City shall provide whatever facilities are deemed necessary and will charge the Successful Bidder for the costs thereof as provided in Section 7, Article 2 of the Hayward Municipal Code.

Traffic control signs, (regulatory, warning or construction type) conforming to the State of California Standards, and any special-legend signs required, except "NO PARKING" signs, shall be furnished by the Successful Bidder as directed by the Engineer.

The Successful Bidder shall install and maintain all signs.

Any obstructions which will remain in the roadway after darkness MUST BE adequately outlined with barricades with flashers or delineators along with other warning devices. All barricades and delineators shall conform to State of California Manual of Warning Signs, Lights, and Devices for Use in Performance of Work upon Highways.

Safe and convenient pedestrian access shall be provided at all times.

Flagmen are mandatory at locations where equipment is intermittently blocking a traffic lane or where only one lane is available for two-direction traffic. One flagman is required for each direction of traffic affected where only one lane is available for over 100 feet or when required by the Engineer. When less than 20 feet of street width is available for traffic, a flagman will be required. Flagman shall wear distinctive clothing, such as a RED jacket.

All work specified herein shall be considered to be at the Successful Bidder's expense.

1.08 Responsibility for Damage: The Successful Bidder shall take all responsibility for the Work, shall bear all losses and damages directly or indirectly resulting to the Bidder, to any subcontractor, to the City, to City employees, or to parties designated in any purchase order provision, on account of the performance or character of The Work, unforeseen difficulties, accidents, occurrences or other causes predicted on active or passive negligence of the City, or of parties designated in any purchase order provisions. Said Bidder shall assume the defense of and shall indemnify and hold harmless the City, its officers, officials, directors, employees and agents from and against any or all loss, liability, expense, claim, costs, suits and damages of every kind, nature and description directly or indirectly arising from the performance of The Work.

Approval of the insurance contract does not relieve the Successful Bidder or subcontractors from liability under this clause.

1.09 Responsibility for Work: Except as provided above, until the formal acceptance of The Work by the City, the Successful Bidder shall have the charge and care thereof and shall bear the risk of injury or damage to any part thereof by the action of the elements or from any other cause, whether arising from the execution or from the nonexecution of The Work. The Successful Bidder shall rebuild, repair, and restore, and make good all injuries or damages to any portion of The Work occasioned by any of the above causes before final acceptance and shall bear the expense thereof, except such injuries or damages occasioned by acts of the Federal Government or of the public enemy.

1.10 No Personal Liability: Neither the City Council, officers, employees or agents of the City of Hayward, nor any other officer or authorized assistant or agent shall be personally responsible for any liability arising from or in

connection with The Work.

1.11 Responsibility of City: The City of Hayward shall not be held responsible for the care or protection of any material or parts of The Work prior to final acceptance, except as expressly provided for in these specifications.

1.12 Successful Bidder Not an Agent of the City of Hayward: The right of general supervision of the City of Hayward shall not make the Successful Bidder an agent of the City; and the liability of the Successful Bidder for all damages to persons or to public or private property arising from the Successful Bidder's execution of The Work shall not be lessened because of such general supervision.

1.13 Inspection and Payments Constitute No Waiver of Order Provisions: Neither the Inspection by the City Engineer nor by an inspector or other City representative, nor any payment of money, nor acceptance of any part or whole of The Work by the City of Hayward or its agents shall operate as a waiver of any provision of the order.

1.14 Insurance Requirements: Successful Bidder shall promptly obtain, at the Bidder's own expense, all the insurance required by this section and shall submit a completed copy of Coverage Verification signed by the Successful Bidder's agent or broker to the City's Purchasing Division for review and approval by the City. Insurance requirements must be met prior to issuance of purchase order. It is highly recommended that Bidders confer with their insurance carrier or broker to determine in advance of bid submission the availability of insurance coverage and endorsements as prescribed and provided herein. If an apparent successful bidder fails to comply with the insurance requirements, that Bidder may be disqualified.

(1) The Successful Bidder shall take out and maintain during the life of the purchase order statutorily sufficient Workers' Compensation and Employer's Liability Insurance for all of the Bidder's employees to be engaged on The Work. Should any work be sublet, the Successful Bidder shall require the subcontractor similarly to provide Workers' Compensation and Employer's Liability Insurance, all in strict compliance with State laws and to fully protect the City from any and all claims arising out of occurrences on The Work.

(2) The Successful Bidder shall take out and maintain in the name of the Successful Bidder and the City as a Named Insured during the life of the purchase order, such Public Liability Insurance as shall protect itself, the City, its officials, officers, directors, employees and agents from claims which may arise from operations under the purchase order, whether such operations be the Bidder, by the City, its officials, officers, directors, employees and agents, any subcontractors, or by anyone directly or indirectly employed by either of them. This Liability Insurance shall include, but shall not be limited to, protection against claims arising from bodily and personal injury and damage to property, resulting from the Successful Bidder's, City's or subcontractor's operations, use of owned or non-owned automobiles, products, and completed operations. The amounts of insurance shall not be less than the following:

Single Limits Coverage Applying to Bodily and Personal Injury Liability and Property Damage: $1,000,000.

If Commercial General Liability Insurance or other form with a General Aggregate Limit is used, either the General Aggregate Limit shall apply separately to the project/location or the General Aggregate Limit shall be twice the required occurrence limit.

The following endorsements must be attached to the policy:

(a) If the Insurance policy covers on an "accident" basis,it must be changed to "occurrence".

(b) The policy must contain a Cross Liability or Severability of Interest Clause.

(c) The policy must cover complete Contractual liability. Exclusions of contractual liability as to bodily injuries, personal injuries and property MUST BE ELIMINATED from the basic policy endorsements.

(d) Broad Form property damage liability must be afforded. Permission is granted for deductible which shall not exceed $10,000 without special approval of the City.

(e) Any failure to comply with reporting or other provisions of the policies including brochures of warranties shall not affect coverage provided to the City, its Officials, Officers, Directors, Employees, or Agents.

(f) An endorsement shall be provided which states that the coverage is PRIMARY INSURANCE and that no other insurance effected by the City will be called upon to contribute to a loss under this coverage.

(g) Cancellation, non-renewal or reduction in limits shall be sent to the City with at least 10 days prior written notice, by certified mail, return receipt requested.

(h)Insurance is to be placed with California Admitted Insurers with an A.M. Best's Rating of no less than A:XI.

Successful Bidder shall not commence work until such insurance has been approved by the City. The Successful Bidder shall not allow any subcontractor to commence work on its subcontract until all similar insurance required of the subcontractor has been obtained. Such insurance shall remain in full force and effect at all times during the prosecution of The Work and until the final completion and acceptance thereof.

1.15 Disposal of Material Outside the Public Right of Way: The Successful Bidder shall make his own arrangements for disposing of materials outside the public right of way, and he shall pay all costs involved.

1.16 Preservation of Property: Attention is directed to Section 1.08, "Responsibility for Damage." Due care shall be exercised to avoid injury to existing improvements or facilities, adjacent property and real or personal property that is not to be removed.

1.17 Cooperation: Should work be performed by other firms, within or adjacent to The Work specified, or should work of any other nature be underway by other forces within or adjacent to said limits, the Successful Bidder shall cooperate with all such other firms or other forces to the end that any delay or hindrance to their work will be avoided. The right is reserved to perform other or additional work at or near the site (including material sources) at any time, by the use of other forces.

When two or more firms are employed on related or adjacent work, each shall conduct his operation in such a manner as not to cause any unnecessary delay or hindrance to the other. Each firm shall be responsible to the other for all damage to work, to persons or property caused to the other by his operations and for loss caused the other due to his unnecessary delays or failure to finish The Work within the time specified for completion.

1.18 Assignment: The performance of The Work may not be assigned except upon the written consent of the Purchasing Agent. Consent will not be given to any proposed assignment which would relieve the Successful Bidder or its surety of their responsibilities under the order. The Successful Bidder may assign monies due or to become due it under the order and such assignment will be recognized by the City, if given proper notice thereof, to the extent permitted by law. That any assignment of money shall be subject to all proper set-offs in favor of the City, and to all deductions provided for in the order, and particularly all money withheld, whether or not assigned, shall be subject to being used by the City for the completion of The Work, in event that the Successful Bidder should be in default therein.

1.19 Time of Completion: The Successful Bidder shall complete all or any designated portion of The Work in all parts and requirements within the time set forth in the order.

1.20 Care and Protection: The Successful Bidder shall be entirely responsible for any damage to the City's or adjacent property due to hauling materials or other causes attributable to the conduct of his work, and all such damage will be repaired by the Successful Bidder when and as directed by

the City's representative, and as required to place the property in as good condition as before the commencement of The Work.

1.21 Nondiscriminatory Employment Practices: In the performance of this contract the contractor or subcontractor agrees as follows:

(1) AFFIRMATIVE ACTION - GENERAL

The contractor or subcontractor shall not discriminate against any applicant for employment or employee on the grounds of race, color, religion, national origin, ancestry, place of birth, sex, sexual orientation, age, or disability. The contractor or subcontractor will take affirmative action to ensure that its recruitment, selection, and evaluation practices do not discriminate against any applicant for employment or employee. The contractor or subcontractor shall also ensure that its personnel policies, practices and procedures, including, but not limited to, the transfer, promotion, demotion, suspension, layoff, or termination, rates of pay and other form of compensation, and the selection for training programs, apprenticeship, and on-the-job training do not discriminate against any employee. The contractor or subcontractor shall post in conspicuous places that are accessible to applicants for employment and employees notices setting forth this Nondiscriminatory Employment Practices Provision.

(2) RECRUITMENT

(a) Non-union employees. Advertising placed with any media shall include the notation, "An Equal Opportunity Employer." Advertisements shall be placed with media having large circulation among minority groups or at school placement centers having large minority student enrollments. The contractor or subcontractor will send to each source of employee referrals, other than labor unions or workers' representatives, a notice in such form and content as shall be furnished or approved by the City, advertising said source of employee referrals of its commitments under Chapter 2, Article 7, of the Hayward Municipal Code, and shall post copies of the notices in conspicuous places available to employees and applicants for employment.

Recruitment of non-union employees shall, to the maximum extent possible, utilize the services of minority organizations likely to be referral sources for minority group employees.

(b) Union employees. Union employees shall be recruited in accordance with applicable labor agreements. The contractor or subcontractor shall send to each labor union or representative of workers with which he has a collective bargaining agreement or other contract or understanding, a notice, in such form and content as shall be furnished or approved by the City, advising said labor union or workers' representatives of its commitments under Chapter 2, Article 7, of the Hayward Municipal Code, and shall post copies of the notice in conspicuous places available to employees and applicants for employment.

The contractor or sub contractor agrees to seek the inclusion in all union agreements to which it is a party, clauses prohibiting discrimination based upon race, color, religion, national origin, ancestry, place of birth, sex, sexual orientation, age, or disability. To the maximum extent consistent with applicable labor agreements, the contractor or subcontractor will attempt to recruit applicants without regard to race, color, religion, national origin, ancestry, place of birth, sex, sexual orientation, age, or disability.

(3) EQUAL EMPLOYMENT OPPORTUNITY OFFICER

The contractor or subcontractor shall designate one of its management employees as its Equal Employment Opportunity Officer and assign such officer the responsibility and authority to administer and promote an active program to put the contractor's or subcontractor's nondiscriminatory employment practices commitment into practice.

(4) ACCESS TO RECORDS

The contractor or subcontractor shall permit access during normal business hours to its records of employment, employment advertisements, completed application forms, and other pertinent data and records when requested to do so by the City Manager or any representative of the Fair Employment Practices Commission of the State of California.

(5) COMPLIANCE REVIEW PROCEDURES

(a) The contractor or subcontractor shall, upon request of the City Manager, submit its official payroll records together with a monthly cumulative summary of all employee hours worked in performance of its contract with or on behalf of the City identified as to minority status.

(b) The contractor or subcontractor shall submit to a formal, thorough review of its records, books, reports, and accounts concerning its employment practices for the purpose of determining whether they are nondiscriminatory. This review will be performed at intervals during the performance of the contract as may be specified by the City Manager.

Each review shall be followed within 30 days by either a written notice to the contractor or subcontractor that it is in apparent compliance with the Nondiscriminatory Employment Practices Provision of its contract or by a citation of apparent deficiency, summary of findings, and a statement of remedial commitment for signature by the contractor. If the contractor or subcontractor fails to meet the commitments it has made in executing such statement, the City Manager shall issue a notice of intent to initiate an action against the contractor or subcontractor with the Fair Employment Practices Commission for willful violation of the Nondiscriminatory Employment Practices Provision and the California Fair Employment Practices Act in not less than 30 days or such notice of intent.

(6) VIOLATIONS

The City Manager shall deem a finding of willful violation of the Nondiscrimination Employment Practices Provision and the California Fair Employment Practices Act to have occurred upon receipt of written notice from the Fair Employment Practices Commission that it has investigated and determined that the contractor or subcontractor has violated the Fair Employment Practices Act and has issued an order under Labor Code Section 1426, which has become final, or obtained relief under Labor Code Sections 1429 and 1429.1, or an appropriate federal commission or agency, or a court of the State of California, or if the United States Government finds, in any action or proceeding to which the contractor or subcontractor is a party, that it discriminated against employees or applicants for employment in the performance of this contract. Upon receipt or such notice or final judgment, the City Manager shall notify the contractor or subcontractor that unless it demonstrates to the satisfaction of the City Council within a stated reasonable period that the violation has been corrected, said contractor or subcontractor shall be subject to the remedies hereinafter provided.

(7) REMEDIES FOR WILLFUL VIOLATION

The contractor or subcontractor agrees that a finding of willful violation of the California State Fair Employment Practices Act or of this Nondiscriminatory Employment Practices Provision shall be regarded by the City Council as a basis for determining whether or not it is a responsible bidder as to future contracts for which such contractor or subcontractor may submit bids. The contractor or subcontractor further agrees that such disqualification by said City Council shall remain in effect for one year or until it demonstrates to the satisfaction of the City Manager that its employment practices are in conformity with the nondiscrimination provisions of the article.

The contractor or subcontractor further agrees that the contractor or subcontractor shall, as a penalty to the City of Hayward, forfeit for each calendar day or portion thereof an amount not to exceed $250 or 1 percent of the total contract amount, whichever is greater. Such penalty may be deducted form any sums due to the contractor or subcontractor or recovered by the City through maintenance of an action in any court of competent jurisdiction.

Prior to making any determination with respect to reinstatement of a contractor or subcontractor as a responsible bidder, the City Council may refer the matter to the Human Relations Commission of the City of Hayward for a report and recommendation. The contractor or subcontractor agrees to cooperate to the fullest extent with said Human Relations commission in its exercise of the authority here conferred, including, but not limited to, promptly furnishing reports requested by the commission's review of matters relating to such reinstatement.

1.22 Acceptance and/or Rejection of Bids: The City reserves the right to reject any or all bids, or to accept separate items in a bid. In addition the City reserves the right to cancel a Request for Bids or an award at any time.

1.23 Waiving Minor Irregularities: The City may waive any minor irregularities in a bid or in the bidding process and make award accordingly.

1.24 Nuclear Affirmation Requirements: A purchase order has no force or effect until the person to which it is issued has on file with the City or executes and returns to the City of Hayward's Purchasing Manager an Affirmation Of Non-Involvement In Development Or Production Of Nuclear Weapons. City of Hayward Ordinance 87-024 C.S. defines "nuclear weapons" as "any device the intended explosion of which results from the energy released by fission or fusion reactions involving atomic nuclei." The ordinance defines "person" as "any person, private corporation, institution or other entity."

1.25 Hazardous Material Requirements: The contractor shall comply with all government laws, rules and regulations concerning the use of hazardous materials and the disposal of hazardous wastes at the job site, including but not limited to the following:

(1) The contractor shall not bring hazardous materials onto the job site or deliver hazardous materials without providing the City, in advance, the Material Safety Data Sheets for each hazardous material introduced. Where applicable, materials must be labeled in accordance with Section 5194, Title 8, of the California Administrative Code. The contractor is required to include a Material Safety Data Sheet prepared in accordance with Section 5194 (g) with each shipment of all such materials to the City. No hazardous material will be introduced onto the job site until the City gives written approval for each hazardous material.

(2) All hazardous material shall be stored and used in a safe manner and shall not be stored or used in any vehicular or pedestrian traffic lanes.

(3) Any hazardous products, waste or empty containers used or generated shall not be poured down any drain or sewer nor disposed of in any trash container or dumpster.

(4) The contractor will be considered to be the hazardous waste generator and will be responsible for the legal transport and disposal of all hazardous waste. No containers or trash will be left in any building or on any job site.

(5) The contractor shall not disturb or damage any existing pipe lagging or equipment insulation or other asbestos material on the job site. If any asbestos material is disturbed or damaged, the contractor shall immediately notify the City and the situation will be considered an "asbestos release" under State and Federal Regulations. The job will be shut down immediately until all appropriate State and Federal notifications have been complete and all testing completed to determine if any asbestos fibers have been released.

(6) Violation of any of the above procedures shall be sufficient cause for the City to stop all work. Any expense incurred by the City caused by the work stoppage will be borne by the contractor. These expenses will include all costs to return the job site and all other areas contaminated by the contractor to a hazard-free condition.

(7) The contractor will be solely responsible for all the costs, including fines and penalties, for the investigation and cleanups of any suspected hazardous materials the contractor used, left on the job site, or dumped down a City drain or sewer, and any damage to property and/or injury to any person.

1.26 Recycled Materials: It is the policy of the City of Hayward to encourage the use of recycled materials, reusable products, and products designed to be recycled. Contractors and suppliers shall use or provide such materials or products to the maximum extent practicable and allowable within the specifications prepared by the City, provided however, that the performance or operational effectiveness of the product or material is not detrimentally effected nor the health and safety of the citizens or employees of the City of Hayward negatively impacted by the use of such products or materials.

(REV. 01/31/13)

Exhibit B
Drawings and Manufacturer's Instructions and Media Specifications

Attachment 1 -	Siloxane Removal Vessel Drawings.
Attachment 2 –	H2S Removal Vessel Drawings.
Attachment 3 –	Gas Conditioning System P&ID and System Layout Drawing.
Attachment 4 –	Hydrogen Sulfide Removal System Procedures & Manufacturer's Instructions for H2S Removal System Media Replacement with Iron Sponge Material.
Attachment 5 -	Manufacturer's Instructions for Siloxane Removal System Media Replacement.
Attachment 6 -	Iron Sponge Material Specification
Attachment 7 –	Activated Carbon Material Specification for Siloxane Removal
Attachment 8 -	Photographs

REV.	DESCRIPTION	DATE	BY	APPV'D.
–	ISSUED FOR REVIEW			LEH
A	REVISED PIPING	10/26/13	TR	LEH
B	REVISED ITEM –26 MATERIAL	11/20/13	TR	LEH
C	RELOCATED –33 SUPPORT	12/23/13	TR	LEH
D	BASE PLATE REVISED	2/20/14	LEH	LEH
E	REVISED BOM	2/25/14	JNT	LEH
F	REVISED PER REVIEW COMMENTS	11/24/14	BRS	LEH

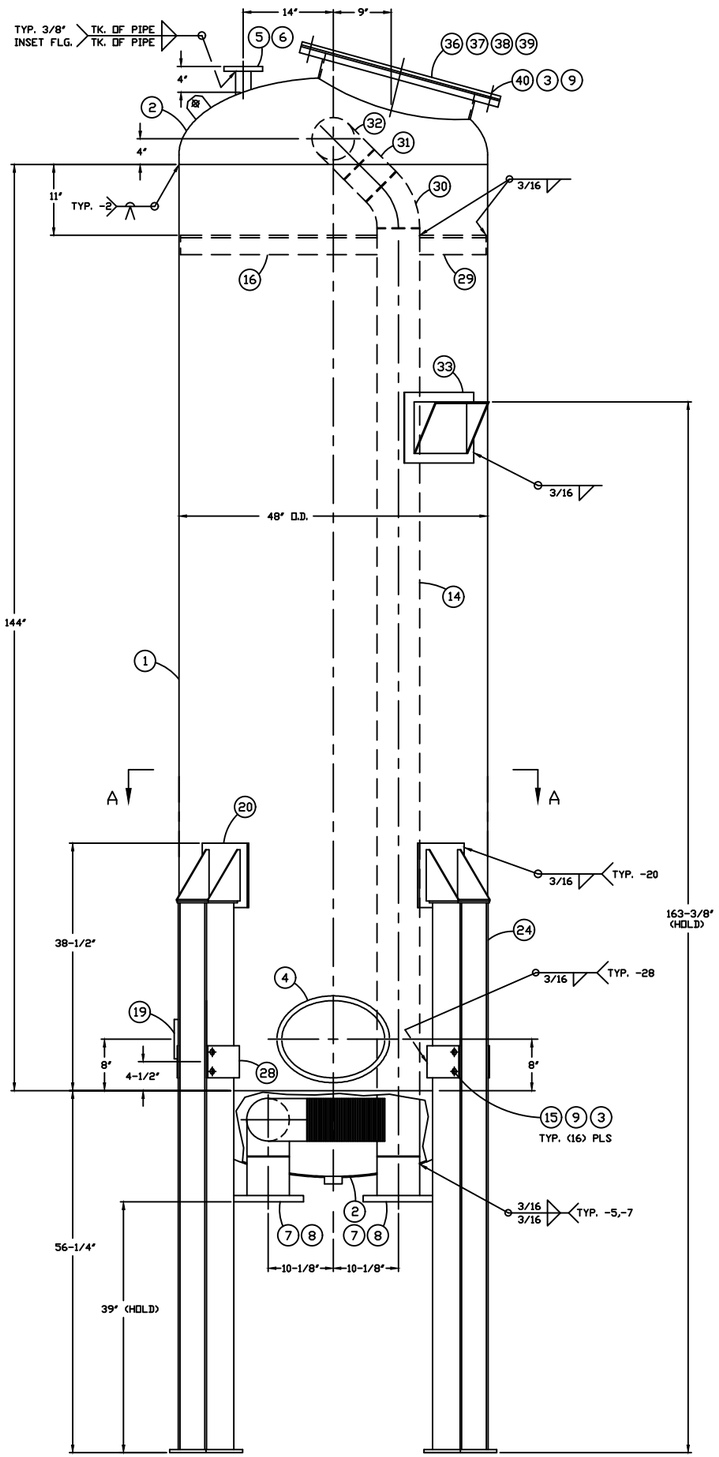

ELEVATION VIEW
SCALE: 1/8" = 1'

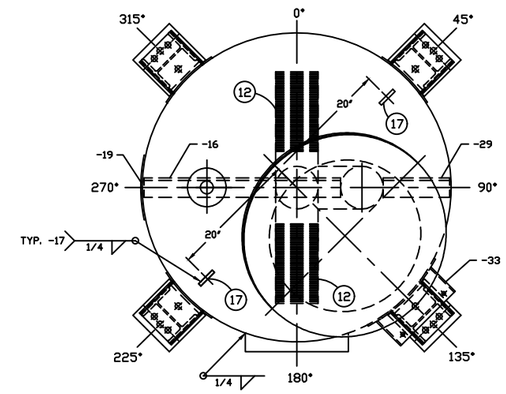

PLAN VIEW
SCALE: 1/8" = 1'

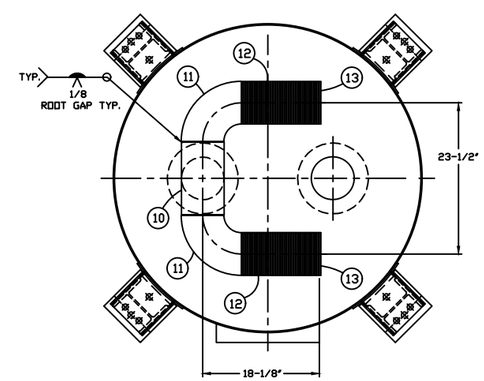

SECTION A-A
SCALE: 1/8" = 1'

ITEM	QTY	ESC P/N	DESCRIPTION
1	1	ESC2300804– 1	3/16" TK. X 48" O.D. SHELL X 144" LG. SA240–304
2	2	ESC2300804– 2	3/16" TK. X 48" O.D. 2:1 SE HEAD W/ 1–1/2" SF SA240–304
3	80	ESC2300804– 3	3/4" I.D. FLAT WASHER S.S. TYPE 316
4	1	ESC2300804– 4	12" X 16" X 4" X 3/4" ELLIPTICAL MANWAY S.S. TYPE 304
5	1	ESC2300804– 5	2" DIA X 4–1/4" LG. SCH. 10 PIPE S.S. TYPE 304
6	1	ESC2300804– 6	2" DIA RFSO FLANGE S.S. TYPE 304
7	2	ESC2300804– 7	6" DIA X 6–5/8" LG. SCH. 10 PIPE S.S. TYPE 304
8	2	ESC2300804– 8	6" DIA RFSO FLANGE S.S. TYPE 304
9	40	ESC2300804– 9	3/4–10 HEX NUT S.S. TYPE 316
10	1	ESC2300804–10	6" DIA SCH. 10 TEE S.S. TYPE 304
11	2	ESC2300804–11	6" DIA SCH. 10 S/R ELBOW S.S. TYPE 304
12	4	ESC2300804–12	6" DIA X 12" LG. WEDGEWIRE SCREEN S.S.
13	4	ESC2300804–13	1/8" TK. X 6–5/8" DIA PLATE S.S. TYPE 304
14	1	ESC2300804–14	6" DIA X 144–3/16" LG. SCH. 10 PIPE S.S. TYPE 304
15	16	ESC2300804–15	3/4–10 X 1–1/2" LG. HEX HD BOLT S.S. TYPE 316
16	1	ESC2300804–16	3" X 3" X 3/8" X 30–9/16" LG. ANGLE S.S. TYPE 304
17	2	ESC2300804–17	3/8" TK. X 3" X 3" LIFT LUG S.S. TYPE 304
18	1	ESC2300804–18	1–1/2" DIA HALF COUPLING S.S. TYPE 304
19	1	ESC2300804–19	ESC NAMEPLATE
20	4	ESC2300804–20	LEG MOUNT ASSY
21	4	ESC2300804–21	1/4" TK. X 10" X 10" PLATE S.S. TYPE 304 W/ 3/16" ø WEEP HOLE
22	8	ESC2300804–22	1/4" TK. X 7" X 8" PLATE S.S. TYPE 304 W/ 45° CHAMFER
23	4	ESC2300804–23	1/4" TK. X 6–1/2" X 7" PLATE S.S. TYPE 304
24	4	ESC2300804–24	LEG ASSY
25	4	ESC2300804–25	1/4" X 6–1/2" X 6–1/2" SA36 PLATE
26	4	ESC2300804–26	W6 X 20 BEAM X 85" LG. A992
27	4	ESC2300804–27	1/2" TK. X 12" X 12" SA36 PLATE
28	8	ESC2300804–28	1/4" TK. X 6" X 7–1/4" PLATE S.S. TYPE 304
29	1	ESC2300804–29	3" X 3" X 3/8" X 10–5/16" LG. ANGLE S.S. TYPE 304
30	1	ESC2300804–30	6" DIA SCH 10 L/R 45° ELBOW S.S. TYPE 304
31	1	ESC2300804–31	6" DIA X 4–11/16" LG. SCH. 10 PIPE S.S. TYPE 304
32	1	ESC2300804–32	6" DIA SCH 10 TEE S.S TYPE 304
33	1	ESC2300804–33	SUPPORT ASSY
34	1	ESC2300804–34	1/4" TK. X 11" X 15" PLATE S.S. TYPE 304
35	1	ESC2300804–35	1/4" TK. X 5–1/4" X 27" PLATE S.S. TYPE 304
36	1	ESC2300804–36	1/4" TK. X 24" I.D. X 5" LG. S.S. TYPE 304
37	1	ESC2300804–37	1/2" TK. X 24–1/4" I.D. X 32" O.D. PLATE S.S. TYPE 304
38	1	ESC2300804–38	1/2" TK. X 32" O.D. PLATE S.S. TYPE 304
39	1	ESC2300804–39	1/4" TK. X 24–1/4" I.D. BUNA–N GASKET
40	24	ESC2300804–40	3/4–10 X 2–1/2" LG. HEX HD. BOLT S.S. TYPE 316

GENERAL NOTES

1. ALL BUTT WELDS HARD WIRE ROOT W/ FCAW COVER.
2. NO BACKING ALLOWED.
3. BOLT HOLES ON FLANGES TO STRADDLE CENTERLINES.
4. CLEAN INTERIOR FREE OF SLAG, VARNISH, WATER, ETC.
5. EXTERIOR ONLY – BEAD BLAST.
6. GALVANIZE REMOVABLE LEGS
7. VESSEL TO BE 15 PSI RATED.

Attachment 1 - Page 1 of 3

NOTICE: THE INFORMATION CONTAINED HEREIN IS THE CONFIDENTIAL AND PROPRIETARY PROPERTY OF ENVIRONMETAL SYSTEMS AND COMPOSITES, INC., A WASHINGTON CORPORATION. THIS MATERIAL IS SUBJECT TO RETURN ON DEMAND AND MUST NOT BE DISCLOSED, OR REPRODUCED, OR USED IN ANY MANNER OTHER THAN FOR WHICH PROVIDED WITHOUT WRITTEN CONSENT OF ENVIRONMENTAL SYSTEMS AND COMPOSITES, INC.

COPYRIGHT 2009 ENVIRONMENTAL SYSTEMS AND COMPOSITES, INC.
ALL RIGHTS RESERVED.

Energy Systems
8665 154TH AVE. N.E. REDMOND, WA 98052
425-497-8111

DATE:	8–24–13
BY:	L. HOWARD
DWG. NO.	
SCALE:	NOTED
DRAWN BY:	TR
JOB NO.	ESC23008

SILOXANE REMOVAL
VESSEL #1
HAYWARD WPCF

DRAWING NO. ESC2300804 | SHT. 1 OF 2

C:\Users\bryan\Dropbox (ESC Corporation)\ESC Corp\Projects\23008_Hayward\Phase 4 FM\Drawings\ESC2300804shtfrevf.dwg, 11/24/2014 11:15:08 AM, DWG To PDF.pc3

REV.	DESCRIPTION	DATE	BY	APPVD.
–	ISSUED FOR REVIEW			LEH
A	REVISED PIPE SPOOLS	10/26/13	TR	LEH
B	REVISED PIPE SPOOLS	12/27/13	TR	LEH
C	REVISED BOM	02/25/13	JNT	LEH

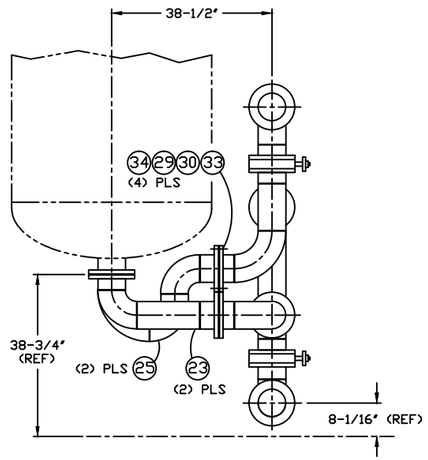

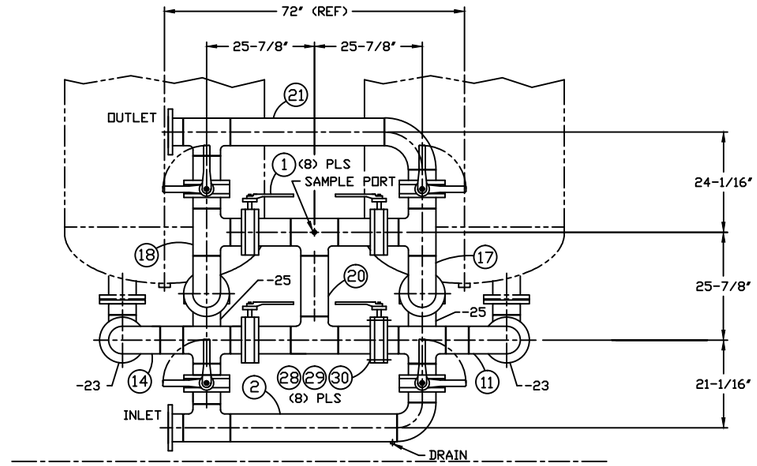

ELEVATION VIEW
SCALE: 3/4" = 1'-0"

ITEM	QTY	ESC P/N	DESCRIPTION
1	8	ESC2300806– 1	6" DIA BUTTERFLY VALVE
2	1	ESC2300806– 2	6" DIA PIPE SPOOL
3	16	ESC2300806– 3	6" DIA BACKING FLANGE S.S. TYPE 304L
4	16	ESC2300806– 4	6" DIA STUB END S.S. TYPE 304L
5	4	ESC2300806– 5	6" DIA 90° S/R SCH 10 ELBOW S.S. TYPE 304L
6	8	ESC2300806– 6	6" DIA SCH 10 TEE S.S. TYPE 304L
7	1	ESC2300806– 7	6" DIA X 39–7/8" LG. SCH 10 PIPE S.S. TYPE 304L
8	1	ESC2300806– 8	1" DIA 3000# HALF COUPLING S.S. TYPE 304L
9	10	ESC2300806– 9	6" DIA 150# RFSO FLANGE S.S. TYPE 304L
10	2	ESC2300806–10	6" DIA X 3–1/8" LG. SCH 10 PIPE S.S. TYPE 304L
11	1	ESC2300806– 11	6" DIA PIPE SPOOL
12	1	ESC2300806–12	6" DIA X 6–1/2" LG. SCH 10 PIPE S.S. TYPE 304L
13	2	ESC2300806–13	6" DIA X 5–3/8" LG. SCH 10 PIPE S.S. TYPE 304L
14	1	ESC2300806–14	6" DIA PIPE SPOOL
15	4	ESC2300806–15	6" DIA X 8–5/16" LG. SCH 10 PIPE S.S. TYPE 304L
16	1	ESC2300806–16	6" DIA X 14–3/8" LG. SCH 10 PIPE S.S. TYPE 304L
17	1	ESC2300806–17	6" DIA PIPE SPOOL
18	1	ESC2300806–18	6" DIA PIPE SPOOL
19	1	ESC2300806–19	6" DIA X 3–1/2" LG. SCH 10 PIPE S.S. TYPE 304L
20	1	ESC2300806– 20	6" DIA PIPE SPOOL
21	1	ESC2300806– 21	6" DIA PIPE SPOOL
22	1	ESC2300806– 22	6" DIA X 36–7/8" LG. SCH 10 PIPE S.S. TYPE 304L
23	2	ESC2300806– 23	6" DIA PIPE SPOOL
24	2	ESC2300806–24	6" DIA X 19" LG. SCH 10 PIPE S.S. TYPE 304L
25	2	ESC2300806–25	6" DIA PIPE SPOOL
26	1	ESC2300806–26	6" DIA PIPE 3–3/8" LG.
27	1	ESC2300806–27	6" DIA X 2" LG. SCH 10 PIPE S.S. TYPE 304L
28	64	ESC2300806–28	3/4–10 X 5–1/2" LG. HEX HD BOLT S.S. TYPE 316
29	96	ESC2300806–29	3/4–10 HEX NUT S.S. TYPE 316
30	192	ESC2300806–30	3/4" ID FLAT WASHER S.S. TYPE 316
31	1	ESC2300806–31	3/4" DIA 3000# HALF COUPLING S.S. TYPE 304L
32	6	ESC2300806–32	6" DIA 90° L/R SCH 10 ELBOW S.S. TYPE 304L
33	32	ESC2300806–33	3/4–10 X 3–1/2" LG. HEX HD BOLT S.S TYPE 316
34	4	ESC2300806–34	1/4" TK. X 6" DIA BUNA–N GASKET

2

12

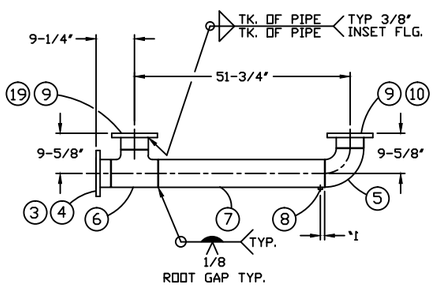

2 PIPE SPOOL
SCALE: 3/4" = 1'-0"

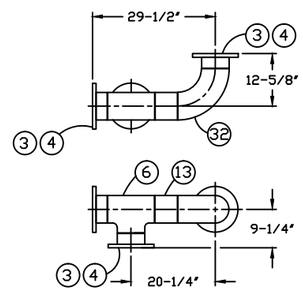

11 PIPE SPOOL
SCALE: 3/4" = 1'-0"

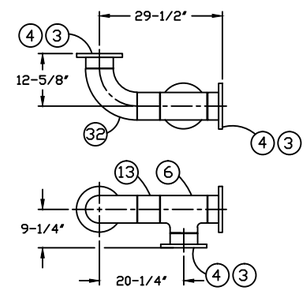

14 PIPE SPOOL
SCALE: 3/4" = 1'-0"

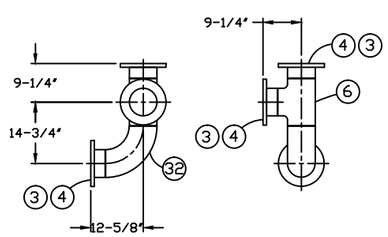

17 PIPE SPOOL
SCALE: 3/4" = 1'-0"

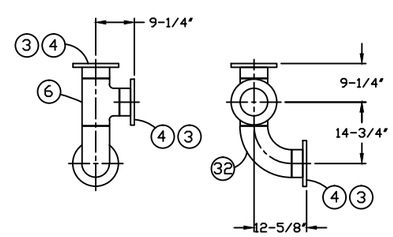

18 PIPE SPOOL
SCALE: 3/4" = 1'-0"

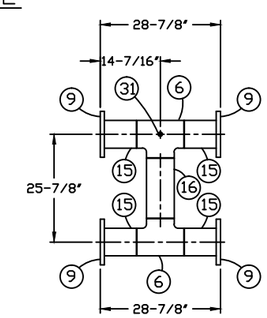

20 PIPE SPOOL
SCALE: 3/4" = 1'-0"

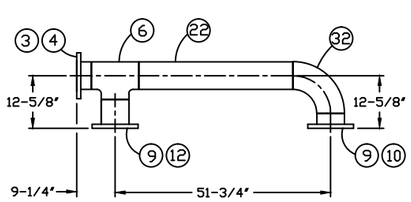

21 PIPE SPOOL
SCALE: 3/4" = 1'-0"

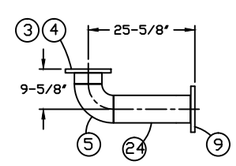

23 PIPE SPOOL
SCALE: 3/4" = 1'-0"

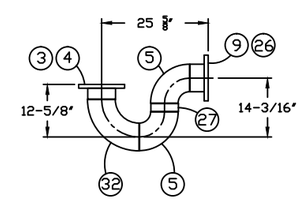

25 PIPE SPOOL
SCALE: 3/4" = 1'-0"

Attachment 1 - Page 2 of 3

NOTICE: THE INFORMATION CONTAINED HEREIN IS THE CONFIDENTIAL AND PROPRIETARY PROPERTY OF ENVIRONMETAL SYSTEMS AND COMPOSITES, INC., A WASHINGTON CORPORATION. THIS MATERIAL IS SUBJECT TO RETURN ON DEMAND AND MUST NOT BE DISCLOSED, OR REPRODUCED, OR USED IN ANY MANNER OTHER THAN FOR WHICH PROVIDED WITHOUT WRITTEN CONSENT OF ENVIRONMENTAL SYSTEMS AND COMPOSITES, INC.
COPYRIGHT 2009 ENVIRONMENTAL SYSTEMS AND COMPOSITES, INC.
ALL RIGHTS RESERVED.

Energy Systems
8665 154TH AVE. N.E. REDMOND, WA 98052
425-497-8111

DATE:	09–01–13
BY:	L. HOWARD
DWG. NO.	
SCALE:	NOTED
DRAWN BY:	TR
JOB NO.	ESC23008

SILOXANE REMOVAL
LEAD/LAG PIPING
HAYWARD WPCF

DRAWING NO. ESC2300806 | SHT.

REV.	DESCRIPTION	DATE	BY	APPVD.
–	ISSUED FOR REVIEW			LEH
A	REVISED PIPING	10/26/13	TR	LEH
B	REVISED ITEM –26 MATERIAL	11/20/13	TR	LEH
C	RELOCATED –33 SUPPORT	12/23/13	TR	LEH
D	REVISED BASE SUPPORT	2/20/14	LEH	LEH
E	REVISED BASE SUPPORT	2/20/14	LEH	LEH
F	REVISED PER REVIEW COMMENTS	11/24/14	BRS	LEH

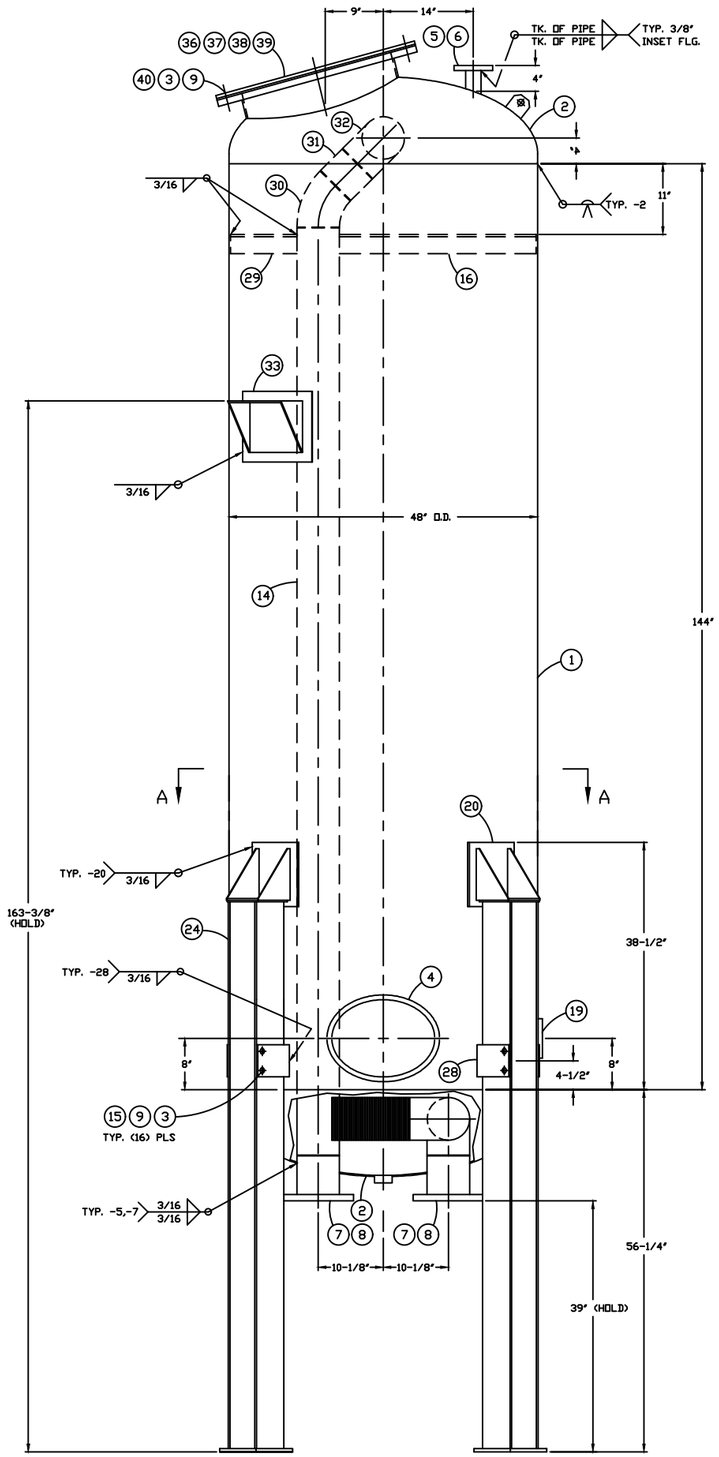

ELEVATION VIEW
SCALE: 1/8" = 1'

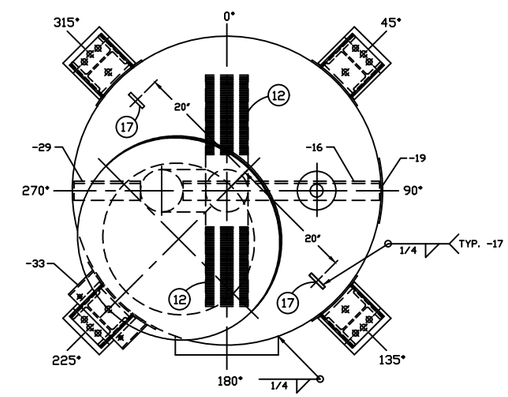

PLAN VIEW
SCALE: 1/8" = 1'

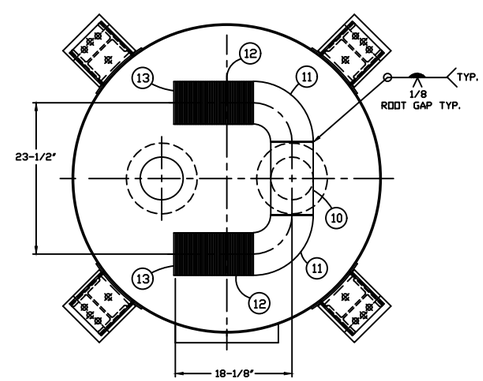

SECTION A-A
SCALE: 1/8" = 1'

ITEM	QTY	ESC P/N	DESCRIPTION
1	1	ESC2300805-1	3/16" TK. X 48" O.D. SHELL X 144" LG. SA240-304
2	2	ESC2300805-2	3/16" TK. X 48" O.D. 2:1 SE HEAD W/ 1-1/2" SF SA240-304
3	80	ESC2300805-3	3/4" I.D. FLAT WASHER S.S. TYPE 316
4	1	ESC2300805-4	12" X 16" X 4" X 3/4" ELLIPTICAL MANWAY S.S. TYPE 304
5	1	ESC2300805-5	2" DIA X 4-1/4" LG. SCH. 10 PIPE S.S. TYPE 304
6	1	ESC2300805-6	2" DIA RFSO FLANGE S.S. TYPE 304
7	2	ESC2300805-7	6" DIA X 6-5/8" LG. SCH. 10 PIPE S.S. TYPE 304
8	2	ESC2300805-8	6" DIA RFSO FLANGE S.S. TYPE 304
9	40	ESC2300805-9	3/4-10 HEX NUT S.S. TYPE 316
10	1	ESC2300805-10	6" DIA SCH. 10 TEE S.S. TYPE 304
11	2	ESC2300805-11	6" DIA SCH. 10 S/R ELBOW S.S. TYPE 304
12	4	ESC2300805-12	6" DIA X 12" LG. WEDGEWIRE SCREEN S.S.
13	4	ESC2300805-13	1/8" TK. X 6-5/8" DIA PLATE S.S. TYPE 304
14	1	ESC2300805-14	6" DIA X 144-3/16" LG. SCH. 10 PIPE S.S. TYPE 304
15	16	ESC2300805-15	3/4-10 X 1-1/2" LG. HEX HD BOLT S.S. TYPE 316
16	1	ESC2300805-16	3" X 3" X 3/8" X 30-9/16" LG. ANGLE S.S. TYPE 304
17	2	ESC2300805-17	3/8" TK. X 3" X 3" LIFT LUG S.S. TYPE 304
18	1	ESC2300805-18	1-1/2" DIA HALF COUPLING S.S. TYPE 304
19	1	ESC2300805-19	ESC NAMEPLATE
20	4	ESC2300805-20	LEG MOUNT ASSY
21	4	ESC2300805-21	1/4" TK. X 10" X 10" PLATE S.S. TYPE 304 W/ 3/16" ø WEEP HOLE
22	8	ESC2300805-22	1/4" TK. X 7" X 8" PLATE S.S. TYPE 304 W/ 45° CHAMFER
23	4	ESC2300805-23	1/4" TK. X 6-1/2" X 7" PLATE S.S. TYPE 304
24	4	ESC2300805-24	LEG ASSY
25	4	ESC2300805-25	1/4" X 6-1/2" X 6-1/2" SA36 PLATE
26	4	ESC2300805-26	W6 X 20 BEAM X 85" LG. A992
27	4	ESC2300805-27	1/2" TK. X 12" X 12" SA36 PLATE
28	8	ESC2300805-28	1/4" TK. X 6" X 7-1/4" PLATE S.S. TYPE 304
29	1	ESC2300805-29	3" X 3" X 3/8" X 10-5/16" LG. ANGLE S.S. TYPE 304
30	1	ESC2300805-30	6" DIA SCH 10 L/R 45° ELBOW S.S. TYPE 304
31	1	ESC2300805-31	6" DIA X 4-11/16" LG. SCH. 10 PIPE S.S. TYPE 304
32	1	ESC2300805-32	6" DIA SCH 10 TEE S.S TYPE 304
33	1	ESC2300805-33	SUPPORT ASSY
34	1	ESC2300805-34	1/4" TK. X 11" X 15" PLATE S.S. TYPE 304
35	1	ESC2300805-35	1/4" TK. X 5-1/4" X 27" PLATE S.S. TYPE 304
36	1	ESC2300805-36	1/4" TK. X 24" I.D. X 5" LG. S.S. TYPE 304
37	1	ESC2300805-37	1/2" TK. X 24-1/4" I.D. X 32" O.D. PLATE S.S. TYPE 304
38	1	ESC2300805-38	1/2" TK. X 32" O.D. PLATE S.S. TYPE 304
39	1	ESC2300805-39	1/4" TK. X 24-1/4" I.D. BUNA-N GASKET
40	24	ESC2300805-40	3/4-10 X 2-1/2" LG. HEX HD. BOLT S.S. TYPE 316

GENERAL NOTES

1. ALL BUTT WELDS HARD WIRE ROOT W/ FCAW COVER.
2. NO BACKING ALLOWED.
3. BOLT HOLES ON FLANGES TO STRADDLE CENTERLINES.
4. CLEAN INTERIOR FREE OF SLAG, VARNISH, WATER, ETC.
5. EXTERIOR ONLY - BEAD BLAST.
6. GALVANIZE REMOVABLE LEGS
7. VESSEL TO BE 15 PSI RATED.

Attachment 1 - Page 3 of 3

NOTICE: THE INFORMATION CONTAINED HEREIN IS THE CONFIDENTIAL AND PROPRIETARY PROPERTY OF ENVIRONMETAL SYSTEMS AND COMPOSITES, INC., A WASHINGTON CORPORATION. THIS MATERIAL IS SUBJECT TO RETURN ON DEMAND AND MUST NOT BE DISCLOSED, OR REPRODUCED, OR USED IN ANY MANNER OTHER THAN FOR WHICH PROVIDED WITHOUT WRITTEN CONSENT OF ENVIRONMENTAL SYSTEMS AND COMPOSITES, INC.
COPYRIGHT 2009 ENVIRONMENTAL SYSTEMS AND COMPOSITES, INC.
ALL RIGHTS RESERVED.

Energy Systems
8665 154TH AVE. N.E. REDMOND, WA 98052
425-497-8111

DATE:	8-24-13	SILOXANE REMOVAL VESSEL #2 HAYWARD WPCF
BY:	L. HOWARD	
DWG. NO.		
SCALE:	NOTED	
DRAWN BY:	TR	
JOB NO.	ESC2300B	DRAWING NO. ESC2300805 — SHT. 1 OF 2

C:\Users\bryan\Dropbox (ESC Corporation)\ESC Corp\Projects\23008_Hayward\Phase 4 PM\Drawings\ESC2300805sht1rev1.dwg, 11/24/2014 11:20:14 AM, DWG To PDF.pc3

NOTICE: THE INFORMATION CONTAINED HEREIN IS THE CONFIDENTIAL AND PROPRIETARY PROPERTY OF ENVIRONMETAL SYSTEMS AND COMPOSITES, INC., A WASHINGTON CORPORATION. THIS MATERIAL IS SUBJECT TO RETURN ON DEMAND AND MUST NOT BE DISCLOSED, OR REPRODUCED, OR USED IN ANY MANNER OTHER THAN FOR WHICH PROVIDED WITHOUT WRITTEN CONSENT OF ENVIRONMENTAL SYSTEMS AND COMPOSITES, INC.

COPYRIGHT 2009 ENVIRONMENTAL SYSTEMS AND COMPOSITES, INC.
ALL RIGHTS RESERVED.

REV.	DESCRIPTION	DATE	BY	APPVD.
–	ISSUED FOR REVIEW			LEH
A	REVISED BOM	11/20/13	TR	LEH
B	ADDED –59 ASSY	12/17/13	TR	LEH
C	REVISED TANK GENERAL NOTES	8/13/14	LEH	LEH

GENERAL NOTES

1. ALL BUTT WELDS HARD WIRE ROOT W/ FCAW COVER.
2. BACKING RINGS ALLOWED.
3. BOLT HOLES ON FLANGES TO STRADDLE CENTERLINES.
4. CLEAN INTERIOR FREE OF SLAG, VARNISH, WATER, ETC.
5. GALVANIZE REMOVABLE LEGS
6. VESSEL TO BE 5 PSI RATED.
7. VESSEL TO BE MINIMUM –2" WC VACUUM RATED.

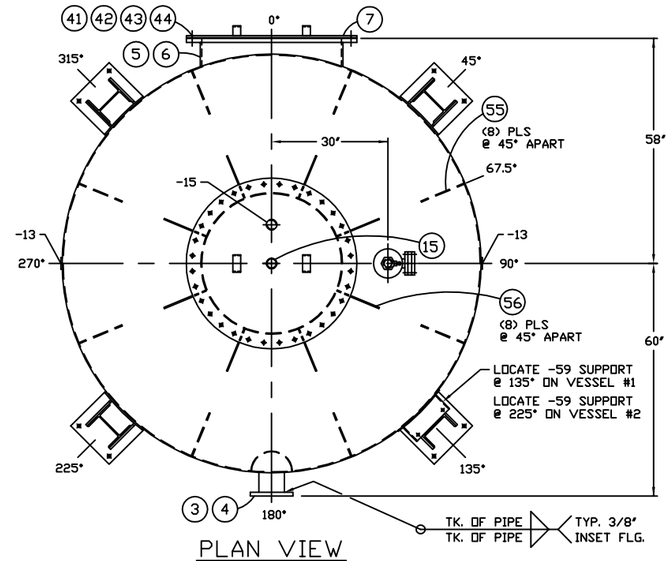

PLAN VIEW
SCALE: 3/4" = 1'-0"

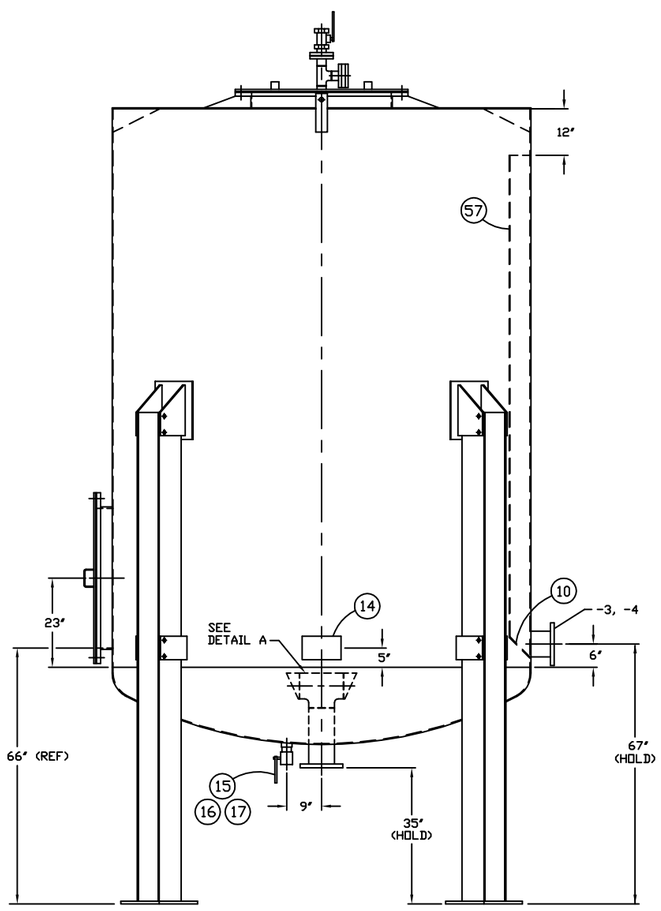

SIDE VIEW
SCALE: 3/4" = 1'-0"

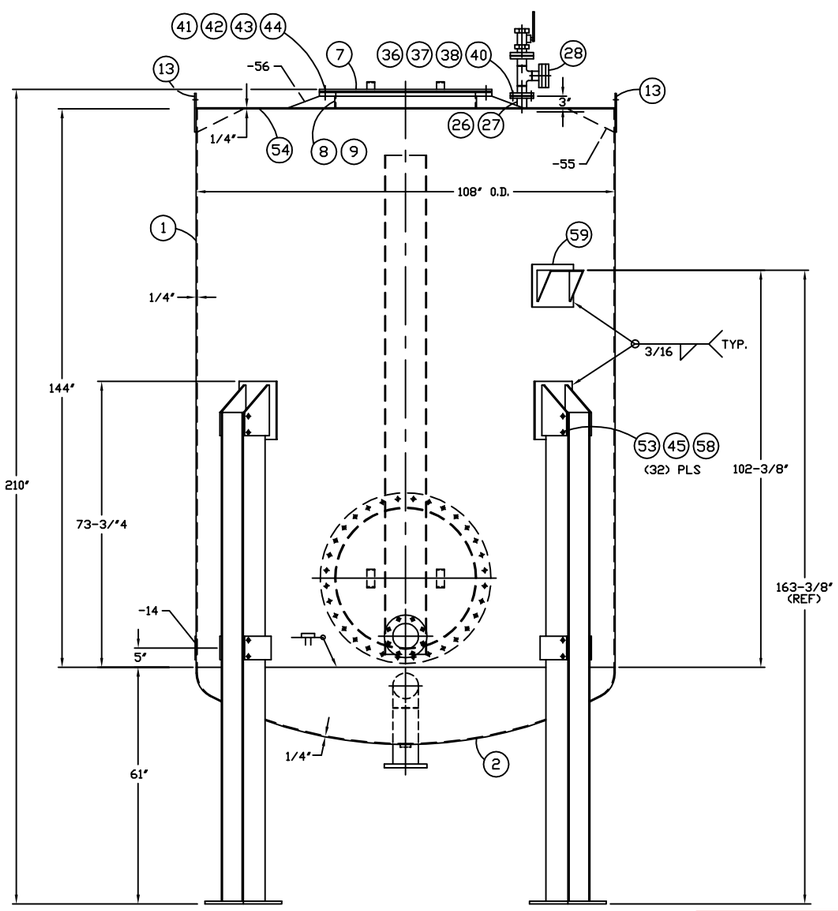

ELEVATION VIEW
SCALE: 3/4" = 1'-0"

ITEM	QTY	ESC P/N	DESCRIPTION
1	1	ESC2300807– 1	1/4" TK. X 108" O.D. SHELL X 144" LG. SS. TYPE 316L
2	1	ESC2300807– 2	1/4" TK. X 108" O.D. F&D HEAD W/1–1/2" SF S.S. TYPE 316L
3	1	ESC2300807– 3	6" DIA X 6–1/4" LG. SCH. 10 PIPE S.S. TYPE 316L
4	2	ESC2300807– 4	6" DIA RFSO FLANGE S.S. TYPE 316L
5	1	ESC2300807– 5	1/4" TK. X 36" I.D. X 7" LG. TYPE 316L
6	1	ESC2300807– 6	1" TK. X 33–5/8" I.D. X 44" O.D. PLATE S.S. TYPE 316L
7	2	ESC2300807– 7	1/2" TK. X 44" DIA PLATE S.S. TYPE 316L
8	1	ESC2300807– 8	1/4" TK. X 36" I.D. X 4–1/16" LG. S.S. TYPE 316L
9	2	ESC2300807– 9	6" DIA X 3–5/16" LG. SCH. 10 PIPE S.S. TYPE 316L
10	1	ESC2300807–10	1/4" TK. PLATE S.S. TYPE 316L
11	1	ESC2300807–11	6" DIA X 15" LG. SCH. 10 PIPE S.S. TYPE 316L
12	1	ESC2300807–12	6" DIA SCH. 10 TEE S.S. TYPE 316L
13	2	ESC2300807–13	3/8" TK. X 3" X 10" PLATE S.S. TYPE 316L
14	1	ESC2300807–14	ESC NAMEPLATE
15	2	ESC2300807–15	2" DIA HALF COUPLING S.S. TYPE 316L
16	1	ESC2300807–16	2" DIA X 2" LG. PIPE NIPPLE S.S. TYPE 316L (SUPPLIED BY ESC CORP.)
17	1	ESC2300807–17	2" DIA BALL VALVE S.S. (SUPPLIED BY ESC CORP.)
18	1	ESC2300807–18	1–1/2" TK. FRP GRATING (SUPPLIED BY ESC CORP.)
19	2	ESC2300807–19	1–1/2" TK. FRP GRATING (SUPPLIED BY ESC CORP.)
20	1	ESC2300807–20	1–1/2" TK. FRP GRATING (SUPPLIED BY ESC CORP.)
21	1	ESC2300807–21	SEFAR POLYPROPYLENE MESH SCREEN NO. 05–420–30 (SUPPLIED BY ESC CORP.)
22	4	ESC2300807–22	3" X 3" X 1/4" X 19–1/8" LG. ANGLE S.S. TYPE 316L
23	4	ESC2300807–23	3" X 3" X 1/4" X 11–3/8" LG. ANGLE S.S. TYPE 316L
24	2	ESC2300807–24	3" X 3" X 1/4" X 58–3/4" LG. ANGLE S.S. TYPE 316L
25	2	ESC2300807–25	3" X 3" X 1/4" X 102–1/4" LG. ANGLE S.S. TYPE 316L
26	1	ESC2300807–26	2" DIA X 3–1/4" LG. SCH. 10 PIPE S.S. TYPE 316L
27	2	ESC2300807–27	2" DIA RFSO FLANGE S.S. TYPE 316L
28	1	ESC2300807–28	PIPE SPOOL (SUPPLIED BY ESC CORP.)
29	3	ESC2300807–29	2" DIA BACKING FLANGE S.S. TYPE 316L
30	3	ESC2300807–30	2" DIA STUB END S.S. TYPE 316L
31	1	ESC2300807–31	2" DIA TEE SCH 10 S.S. TYPE 316L
32	1	ESC2300807–32	2" DIA RUPTURE DISK
33	1	ESC2300807–33	2" DIA NPT FLANGE S.S. TYPE 316L
34	1	ESC2300807–34	2" DIA X 2" LG. PIPE NIPPLE S.S. TYPE 316L
35	1	ESC2300807–35	2" DIA BALL VALVE S.S.
36	8	ESC2300807–36	5/8–11 X 2–1/2" LG. HEX HD BOLT S.S. TYPE 316
37	12	ESC2300807–37	5/8–11 HEX NUT S.S. TYPE 316
38	24	ESC2300807–38	5/8" ID FLAT WASHER S.S. TYPE 316
39	4	ESC2300807–39	5/8–11 X 4" LG. HEX HD BOLT S.S. TYPE 316
40	2	ESC2300807–40	1/4" TK. X 2" DIA BUNA–N GASKET
41	64	ESC2300807–41	3/4–10 X 3" LG. HEX HD BOLT S.S. TYPE 316
42	64	ESC2300807–42	3/4–10 HEX NUT S.S. TYPE 316
43	128	ESC2300807–43	3/4" ID FLAT WASHER S.S. TYPE 316
44	2	ESC2300807–44	1/4" TK. X 36" DIA BUNA–N GASKET
45	32	ESC2300807–45	7/8–9 HEX NUT S.S. TYPE 316
46	4	ESC2300807–46	LEG ASSY
47	4	ESC2300807–47	3/4" TK X 14" X 14" PLATE GALV. STL (SUPPLIED BY ESC CORP.)
48	4	ESC2300807–48	W8 X 31 I–BEAM X 126" LG. STL A992 GALV. (SUPPLIED BY ESC CORP.)
49	8	ESC2300807–49	1/2" TK. X 6" X 9–3/8" PLATE S.S. TYPE 316L
50	6	ESC2300807–50	SUPPORT BRKT ASSY
51	4	ESC2300807–51	3/8" TK. X 13" X 15" PLATE S.S. TYPE 316L
52	8	ESC2300807–52	1/2" TK. X 9" X 13" PLATE S.S. TYPE 316L
53	32	ESC2300807–53	7/8–9 X 2" LG. HEX HD BOLT S.S. TYPE 316
54	1	ESC2300807–54	1/4" TK. X 107–1/2" O.D. PLATE S.S. TYPE 316L
55	8	ESC2300807–55	1/4" TK. X 6" X 12" PLATE S.S. TYPE 316L
56	8	ESC2300807–56	1/4" TK. X 3" X 12" PLATE S.S. TYPE 316L
57	1	ESC2300807–57	10" DIA SCH 10 PIPE HALF SECTION X 129–5/16" LG. S.S. TYPE 316L
58	64	ESC2300807–42	7/8" ID FLAT WASHER S.S. TYPE 316
59	1	ESC2300807–59	SUPPORT ASSY
60	1	ESC2300807–60	1/4" TK. X 11" X 15" PLATE S.S. TYPE 316L
61	1	ESC2300807–61	1/4" TK. X 5" X 27" PLATE S.S. TYPE 316L

Energy Systems
8665 154TH AVE. N.E. REDMOND, WA 98052
425-497-8111

DATE:	08–23–13
BY:	L. HOWARD
DWG. NO.	
SCALE:	NOTED
DRAWN BY:	TR
JOB NO.	ESC23008

H2S REMOVAL VESSEL
HAYWARD WPCF

DRAWING NO. ESC2300807 | SHT. 1 OF 3

REV.	DESCRIPTION	DATE	BY	APPVD.
–	ISSUED FOR REVIEW			LEH
A	REVISED –46,–49 & –50 ITEMS	11/20/13	TR	LEH
B	ADDED –59 ASSY	12/17/13	TR	LEH

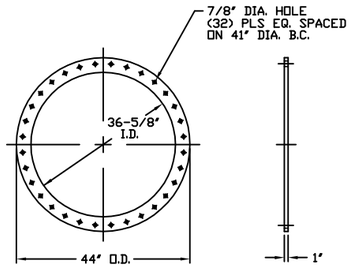

6 FLANGE
SCALE: 3/4" = 1'-0"

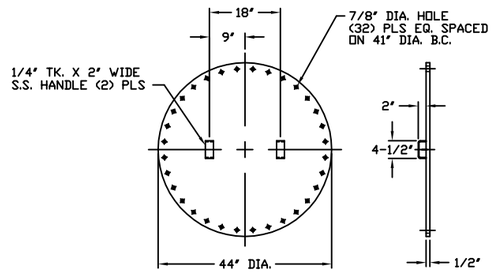

7 MANWAY
SCALE: 3/4" = 1'-0"

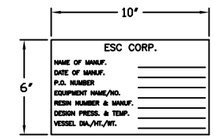

14 NAME PLATE
SCALE: 1/4

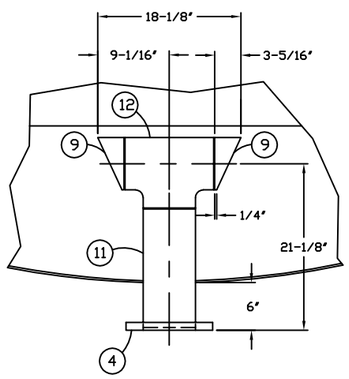

DETAIL A
SCALE: 1/8

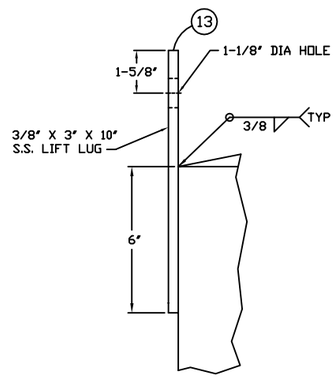

LIFT LUG DETAIL
SCALE: NONE

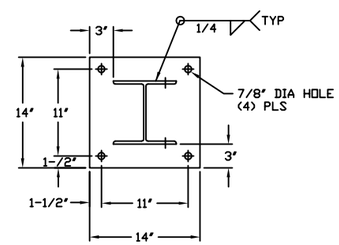

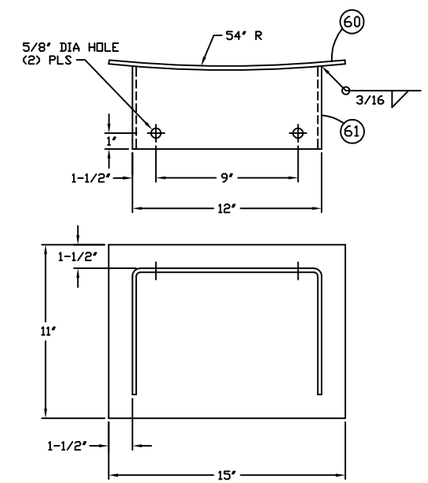

59 SUPPORT ASSY
SCALE: 1/4

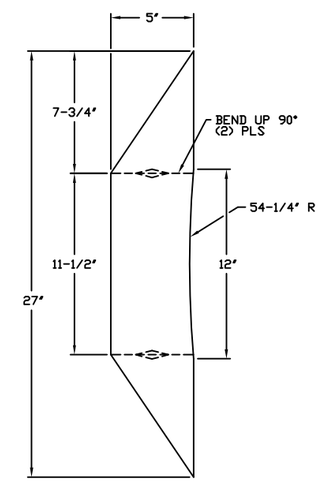

61 SUPPORT
SCALE: 1/4

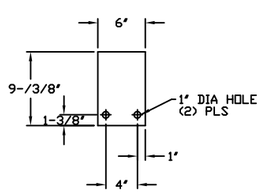

49 SUPPORT PLATE
SCALE: 1/8

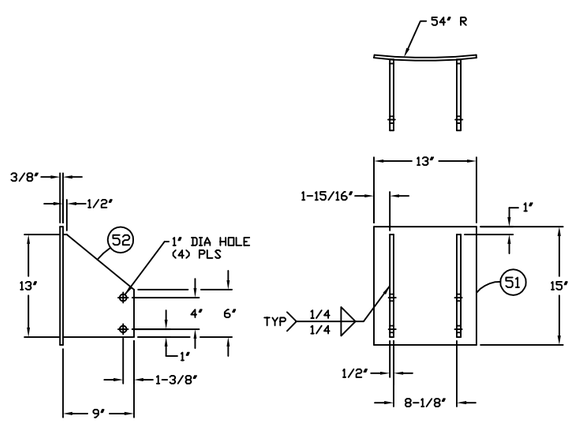

50 SUPPORT BRKT ASSY
SCALE: 1/8

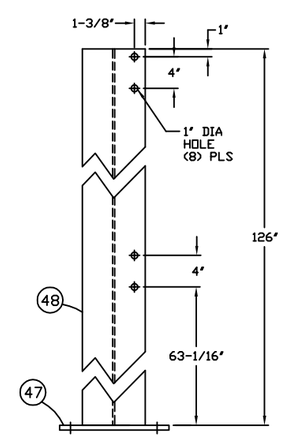

46 LEG ASSY
SCALE: 1/8

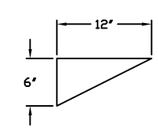

55 GUSSET
SCALE: 1/8

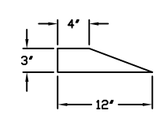

56 GUSSET
SCALE: 1/8

Attachment 2 - Page 2 of 4

Energy Systems
8665 154TH AVE. N.E. REDMOND, WA 98052
425-497-8111

DATE:	08–23–13
BY:	L. HOWARD
DWG. NO.	
SCALE:	NOTED
DRAWN BY:	TR
JOB NO.	ESC23008

H2S REMOVAL VESSEL
HAYWARD WPCF

DRAWING NO. ESC2300807 | SHT. 2 OF 3

REV.	DESCRIPTION	DATE	BY	APPVD.
–	ISSUED FOR REVIEW			LEH

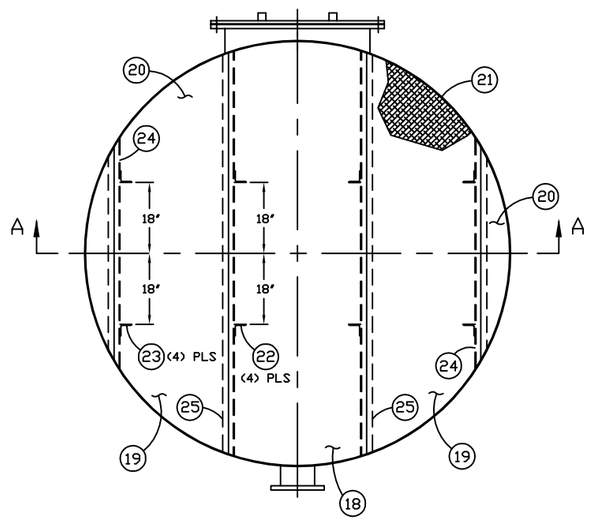

GRATING DETAIL
SCALE: 3/4" = 1'-0"

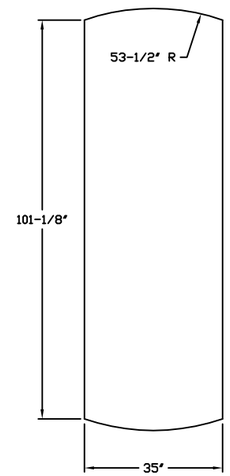

18 GRATING SECTION
SCALE: 3/4" = 1'-0"

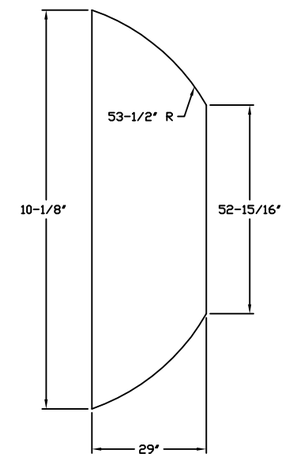

19 GRATING SECTION
SCALE: 3/4" = 1'-0"

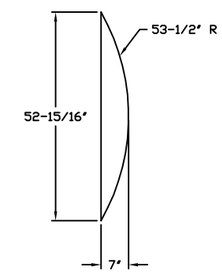

20 GRATING SECTION
SCALE: 3/4" = 1'-0"

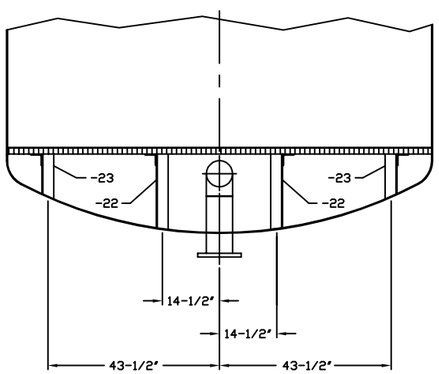

SECTION A-A
SCALE: 3/4" = 1'-0"

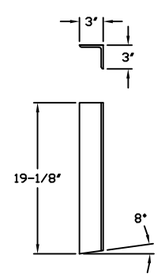

22 ANGLE
SCALE: 1/8

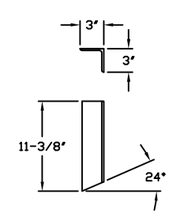

23 ANGLE
SCALE: 1/8

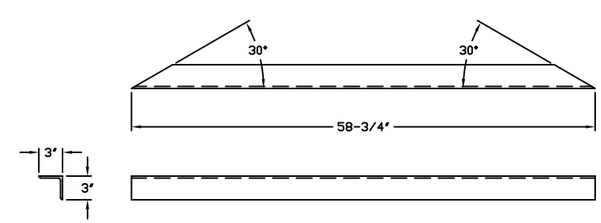

24 ANGLE
SCALE: 1/4

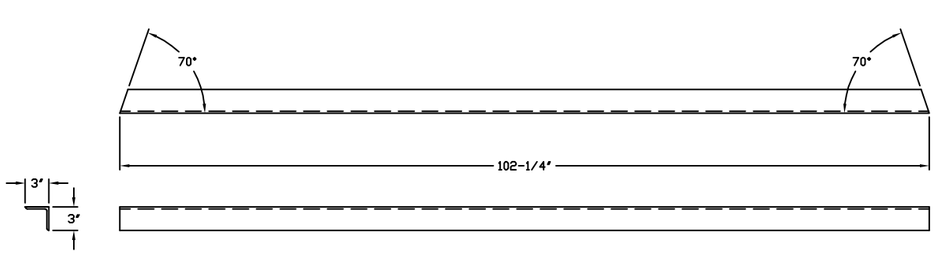

25 ANGLE
SCALE: 1/8

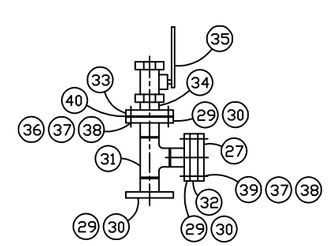

28 PIPE SPOOL
SCALE: 1/8

Attachment 2 - Page 3 of 4

Energy Systems
8665 154TH AVE. N.E. REDMOND, WA 98052
425-497-8111

DATE:	08-23-13
BY:	L. HOWARD
DWG. NO.	
SCALE:	NOTED
DRAWN BY:	TR
JOB NO.	ESC23008

H2S REMOVAL VESSEL
HAYWARD WPCF

DRAWING NO. ESC2300807 | SHT. 3 OF 3

REV.	DESCRIPTION	DATE	BY	APPVD.
–	ISSUED FOR REVIEW			LEH
A	REVISED PIPE SPOOLS	10–26–13	TR	LEH
B	REVISED PIPING HEIGHT	12–27–13	TR	LEH
C	REVISED BOM	2–25–14	JNT	LEH

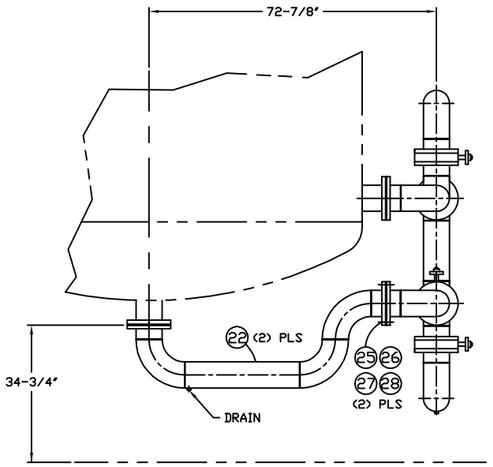

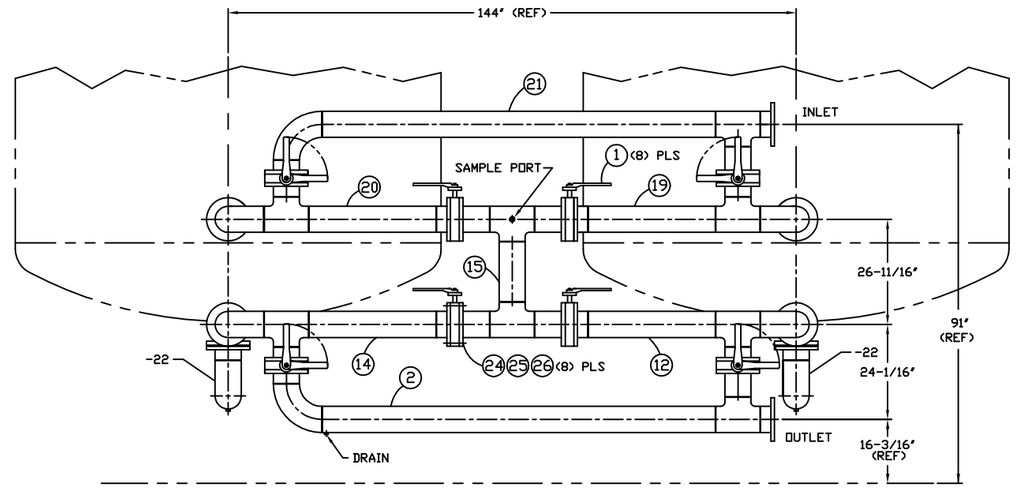

ELEVATION VIEW
SCALE: 3/4" = 1'-0"

ITEM	QTY	ESC P/N	DESCRIPTION
1	8	ESC2300808–1	6" DIA BUTTERFLY VALVE
2	1	ESC2300808–2	6" DIA PIPE SPOOL
3	15	ESC2300808–3	6" DIA BACKING FLANGE S.S. TYPE 316L
4	15	ESC2300808–4	6" DIA STUB END S.S. TYPE 316L
5	9	ESC2300808–5	6" DIA 90° L/R SCH 10 ELBOW S.S. TYPE 316L
6	8	ESC2300808–6	6" DIA SCH 10 TEE S.S. TYPE 316L
7	2	ESC2300808–7	6" DIA X 99–5/8" LG. SCH 10 PIPE S.S. TYPE 316L
8	3	ESC2300808–8	1" DIA 3000# HALF COUPLING S.S. TYPE 316
9	9	ESC2300808–9	6" DIA 150# RFSO FLANGE S.S. TYPE 316L
10	3	ESC2300808–10	6" DIA X 3–1/8" LG. SCH 10 PIPE S.S. TYPE 316L
11	1	ESC2300808–11	6" DIA X 6–1/2" LG. SCH 10 PIPE S.S. TYPE 316L
12	1	ESC2300808–12	6" DIA PIPE SPOOL
13	4	ESC2300808–13	6" DIA X 32–1/4" LG. SCH 10 PIPE S.S. TYPE 316L
14	1	ESC2300808–14	6" DIA PIPE SPOOL
15	1	ESC2300808–15	6" DIA PIPE SPOOL
16	4	ESC2300808–16	6" DIA X 7–5/16" LG. SCH 10 PIPE S.S. TYPE 316L
17	1	ESC2300808–17	8" DIA X 15–3/16" LG. SCH 10 PIPE S.S. TYPE 316L
18	1	ESC2300808–18	3/4" DIA 3000# HALF COUPLING S.S. TYPE 316
19	1	ESC2300808–19	6" DIA PIPE SPOOL
20	1	ESC2300808–20	6" DIA PIPE SPOOL
21	1	ESC2300808–21	6" DIA PIPE SPOOL
22	2	ESC2300808–22	6" DIA PIPE SPOOL
23	1	ESC2300808–23	6" DIA X 29" LG. SCH 10 PIPE S.S. TYPE 316L
24	64	ESC2300808–24	3/4–10 X 5–1/2" LG. HEX HD BOLT S.S. TYPE 316
25	80	ESC2300808– 25	3/4–10 HEX NUT S.S. TYPE 316
26	160	ESC2300808– 26	3/4" ID FLAT WASHER S.S. TYPE 316
27	16	ESC2300808– 27	3/4–10 X 3–1/2" LG. HEX HD BOLT S.S. TYPE 316
28	2	ESC2300808– 28	1/4" TK. X 6" DIA BUNA–N GASKET

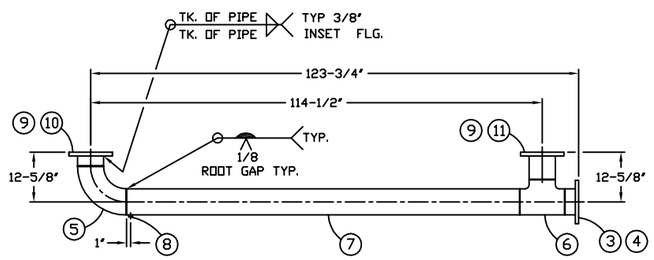

2 PIPE SPOOL
SCALE: 3/4" = 1'-0"

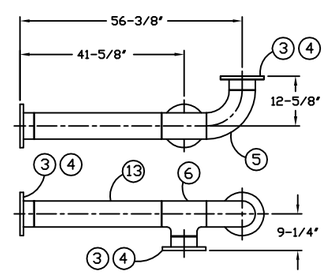

12 PIPE SPOOL
SCALE: 3/4" = 1'-0"

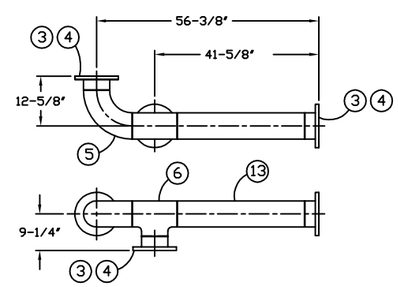

14 PIPE SPOOL
SCALE: 3/4" = 1'-0"

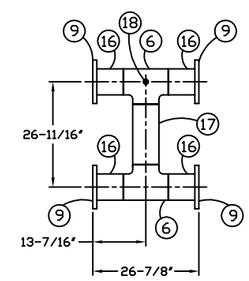

15 PIPE SPOOL
SCALE: 3/4" = 1'-0"

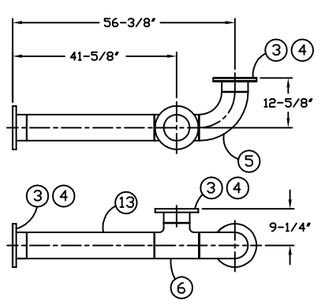

19 PIPE SPOOL
SCALE: 3/4" = 1'-0"

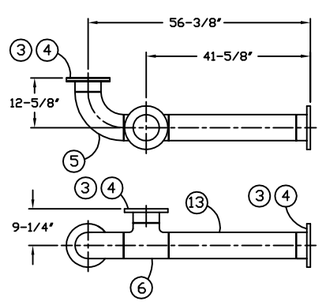

20 PIPE SPOOL
SCALE: 3/4" = 1'-0"

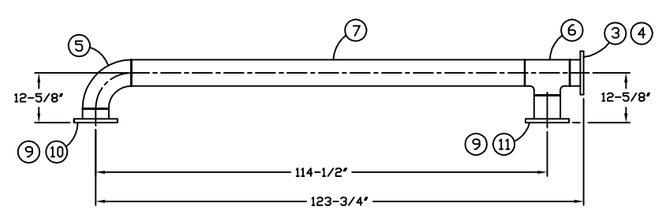

21 PIPE SPOOL
SCALE: 3/4" = 1'-0"

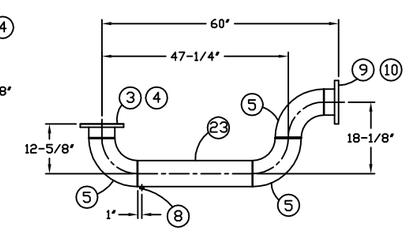

22 PIPE SPOOL
SCALE: 3/4" = 1'-0"

Attachment 2 - Page 4 of 4

NOTICE: THE INFORMATION CONTAINED HEREIN IS THE CONFIDENTIAL AND PROPRIETARY PROPERTY OF ENVIRONMETAL SYSTEMS AND COMPOSITES, INC., A WASHINGTON CORPORATION. THIS MATERIAL IS SUBJECT TO RETURN ON DEMAND AND MUST NOT BE DISCLOSED, OR REPRODUCED, OR USED IN ANY MANNER OTHER THAN FOR WHICH PROVIDED WITHOUT WRITTEN CONSENT OF ENVIRONMENTAL SYSTEMS AND COMPOSITES, INC.

COPYRIGHT 2009 ENVIRONMENTAL SYSTEMS AND COMPOSITES, INC.
ALL RIGHTS RESERVED.

Energy Systems
8665 154TH AVE. N.E. REDMOND, WA 98052
425-497-8111

DATE:	10–26–13
BY:	L. HOWARD
DWG. NO.	
SCALE:	NOTED
DRAWN BY:	TR
JOB NO.	ESC23008

H2S REMOVAL VESSEL
LEAD/LAG PIPING
HAYWARD WPCF

DRAWING NO. ESC2300808 | SHT.

REV.	DESCRIPTION	DATE	BY	APPVD.
–	ISSUED FOR REVIEW	08/15/13	BRS	LEH
A	REDUNDAND ACTUATED CONDENSATE LINE	11/13/13	JNT	LEH
B	TEMPERATURE TRANSMITTERS	12/08/13	JNT	LEH
C	CHECK VALVES ADDED CONDENSATE LINE	1/07/14	JNT	LEH
D	CONDENSATE PUMPS ADDED	1/15/14	JNT	LEH
E	CONDENSATE LEVEL SWITCH ADDED	1/28/14	JNT	LEH
F	LOW PIPING CONDENSATE DRAINS ADDED	2/17/14	JNT	LEH
G	REVISED H2S 001 & 002 LOCATION	8/12/14	BRS	LEH

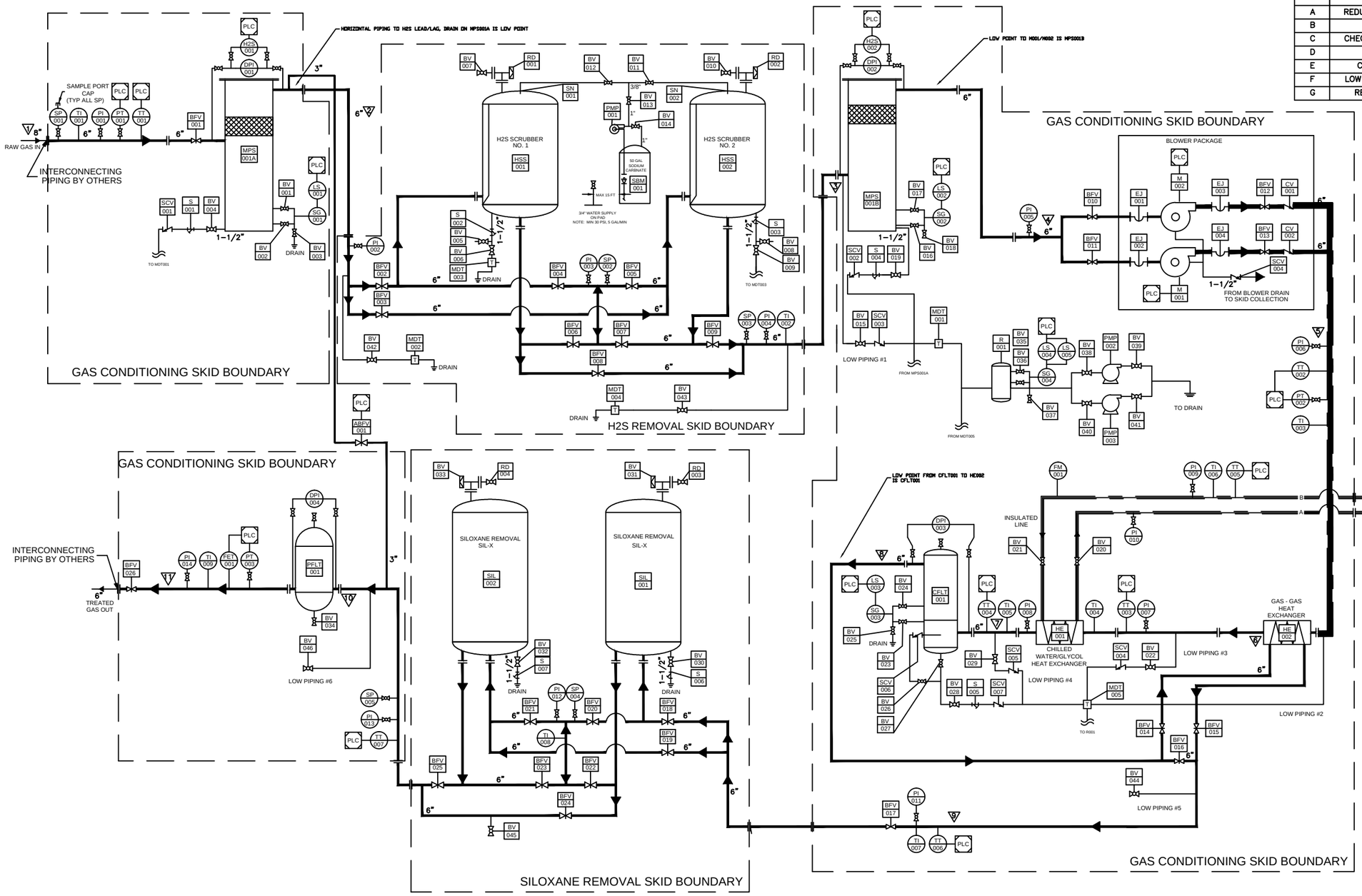

CHL	CHILLER
DPI	DEFERENTIAL PRESSURE INDICATOR
FM	FLOW METER
LS	LEVEL SWITCH
PI	PRESSURE INDICATOR
PLC	PROGRAMMABLE LOGIC CONTROL
PT	PRESSURE TRANSMITTER
RC	REGENERATIVE COMPRESSOR
SG	SITE GAGE
SP	SAMPLE PORT
S	STRAINER
T	DRAIN TRAP
TE	TEMPERATURE ELEMENT
TI	TEMPERATURE INDICATOR
ABV	ACTUATED BALL VALVE
	BUTTERFLY VALVE
	CHECK VALVE
	BALL VALVE

PARAMETER	1	2	3	4	5	6	7	8	9	10	11
SCFM	350	350	350	350	350	350	350	350	350	350	350
ACFM	372	374	382	385	297	255	233	235	254	271	274
P(psig)	.50	.40	.110	–.017	6.44	6.03	5.81	5.69	5.54	4.82	4.63
T DEG F	95	95	95	95	167	85	40	40	77	77	77
REL H%	100	100	100	100	15	70	100	100	26	26	26

Attachment 3 - Page 1 of 2

NOTICE: THE INFORMATION CONTAINED HEREIN IS THE CONFIDENTIAL AND PROPRIETARY PROPERTY OF ENVIRONMENTAL SYSTEMS AND COMPOSITES, INC., A WASHINGTON CORPORATION. THIS MATERIAL IS SUBJECT TO RETURN ON DEMAND AND MUST NOT BE DISCLOSED, REPRODUCED OR USED IN ANY MANNER OTHER THAN FOR WHICH PROVIDED WITHOUT WRITTEN CONSENT OF ENVIRONMENTAL SYSTEMS AND COMPOSITES, INC.

COPYRIGHT 2009 ENVIRONMENTAL SYSTEMS AND COMPOSITES, INC. ALL RIGHTS RESERVED.

Energy Systems
8665 154TH AVE. N.E. REDMOND, WA 98052
425-497-8111

DATE:	08–15–13
BY:	L. HOWARD
DWG. NO.	
SCALE:	NOTED
DRAWN BY:	BRS
JOB NO.	ESC23008

GAS CONDITIONING SYSTEM
P&ID
HAYWARD WPCF

DRAWING NO. ESC23008 | SHT. 1

REV.	DESCRIPTION	DATE	BY	APPVD.
–	ISSUED FOR REVIEW			LEH
A	REVISED SKID LOCATION	12/11/13	TR	LEH
B	ADDED COMPRESSOR PIPING	12/12/13	TR	LEH
C	REVISED SITE LAYOUT	12/15/13	TR	LEH
D	REVISED SITE LAYOUT	12/20/13	TR	LEH
E	REVISED SITE LAYOUT	01/15/14	TR	LEH
F	ADDED SHEET 2, PIPE SPOOLS	02/11/14	TR	LEH
G	ADDED SECTION H–H	02/13/14	TR	LEH
H	ADDED NOTES	02/17/14	TR	LEH
I	REVISED H2S PLATFORM	02/27/14	JT	LEH
J	ADDED PIPE INSULATION	04/18/14	CR	LEH
K	H2S DRIP TRAPS REVISED	04/28/14	JT	LEH
L	REVISED DRIP TRAPS AND GLYCOL LINES	11/30/14	BRS	LEH

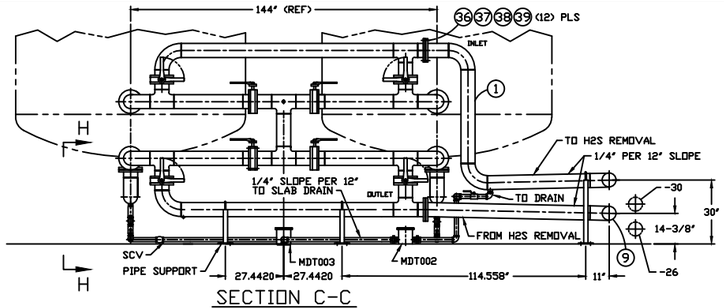

SECTION C-C
SCALE: 3/8" = 1'-0"

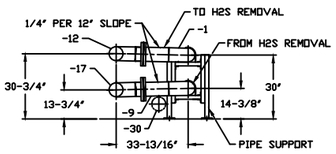

SECTION D-D
SCALE: 3/8" = 1'-0"

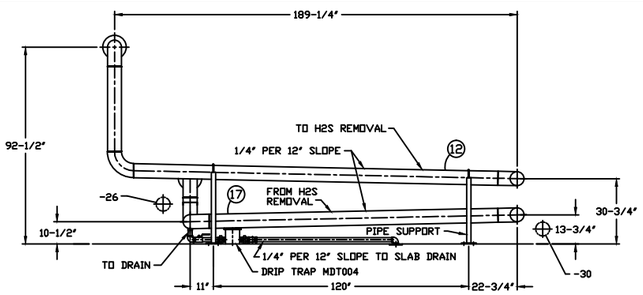

SECTION E-E
SCALE: 3/8" = 1'-0"

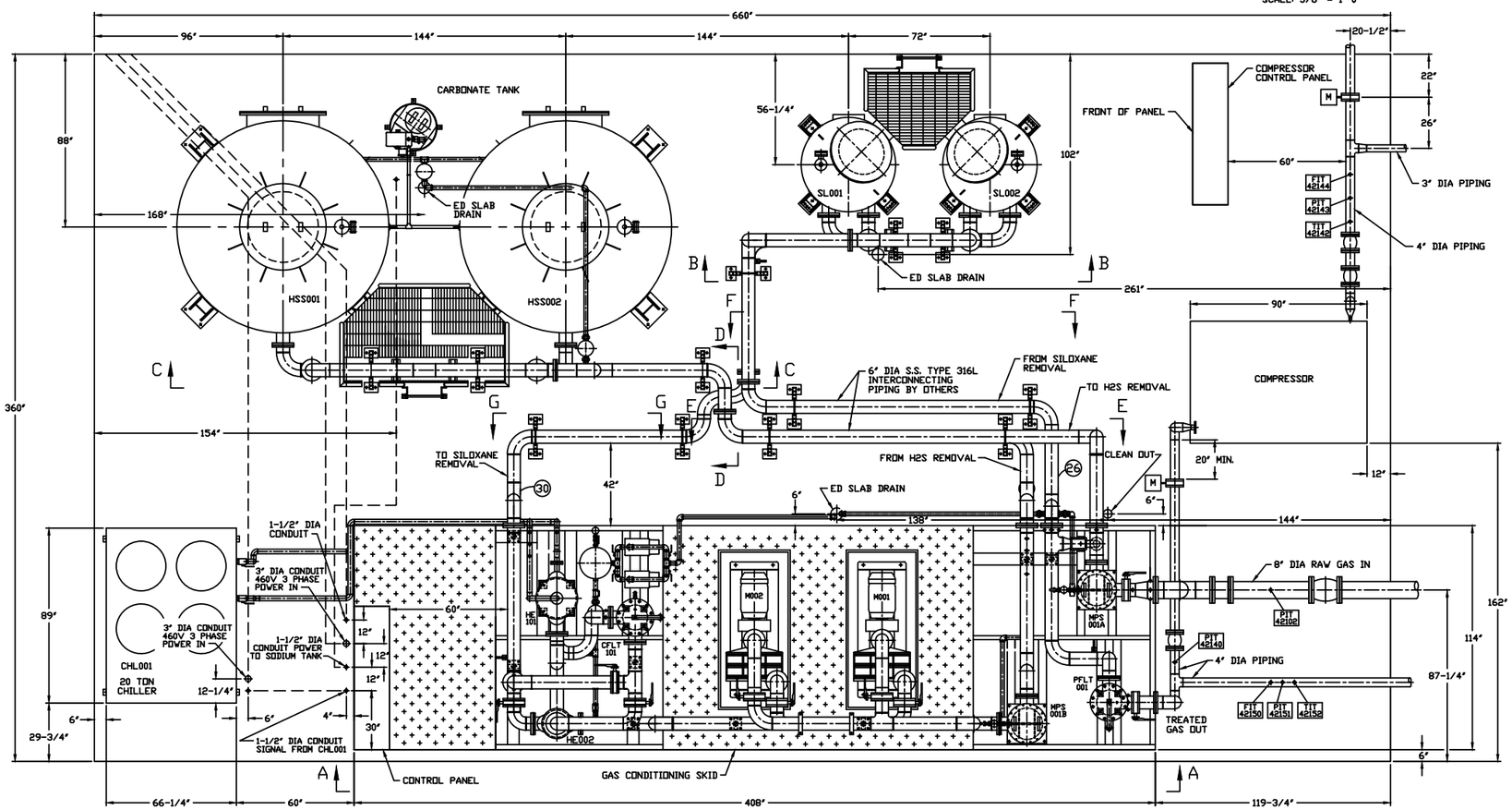

PLAN VIEW
SCALE: 3/8" = 1'-0"

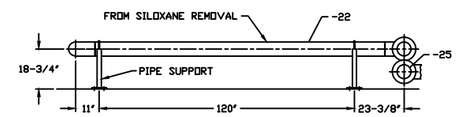

SECTION F-F
SCALE: 3/8" = 1'-0"

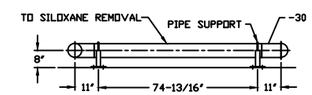

SECTION G-G
SCALE: 3/8" = 1'-0"

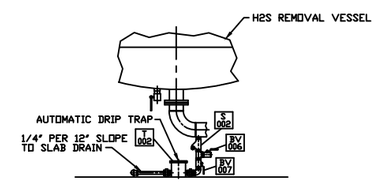

SECTION H-H
SCALE: 3/8" = 1'-0"
TYP. EACH H2S REMOVAL VESSEL

Attachment 3 - Page 2 of 2

GENERAL NOTES

1. INTERCONNECTING PIPE DETAILS SHOWN ON SHEET 2.

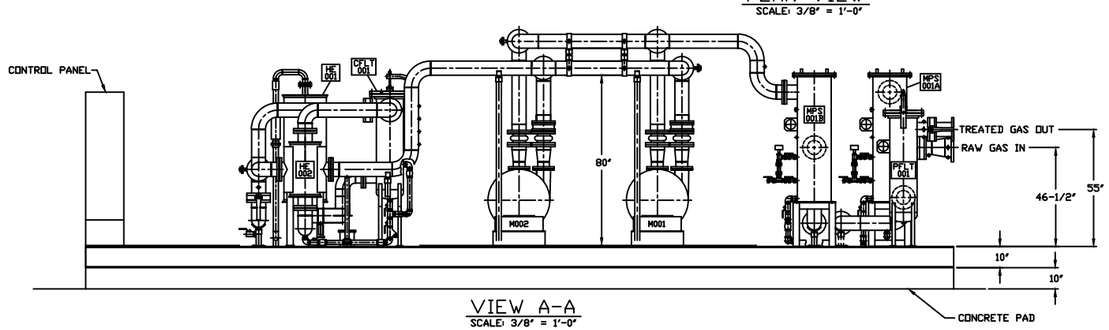

VIEW A-A
SCALE: 3/8" = 1'-0"

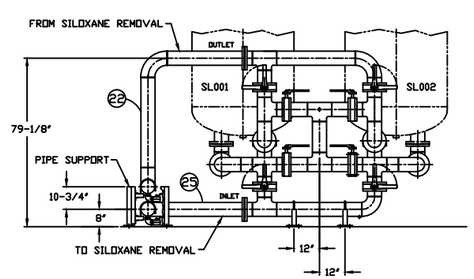

SECTION B-B
SCALE: 3/8" = 1'-0"

NOTICE: THE INFORMATION CONTAINED HEREIN IS THE CONFIDENTIAL AND PROPRIETARY PROPERTY OF ENVIRONMETAL SYSTEMS AND COMPOSITES, INC., A WASHINGTON CORPORATION. THIS MATERIAL IS SUBJECT TO RETURN ON DEMAND AND MUST NOT BE DISCLOSED, OR REPRODUCED, OR USED IN ANY MANNER OTHER THAN FOR WHICH PROVIDED WITHOUT WRITTEN CONSENT OF ENVIRONMENTAL SYSTEMS AND COMPOSITES, INC.

COPYRIGHT 2009 ENVIRONMENTAL SYSTEMS AND COMPOSITES, INC.
ALL RIGHTS RESERVED.

ESC Energy Systems
8665 154TH AVE. N.E. REDMOND, WA 98052
425-497-8111

DATE:	08–18–13	GAS CONDITIONING SYSTEM LAYOUT HAYWARD WPCF
BY:	L. HOWARD	
DWG. NO.		
SCALE:	NOTED	
DRAWN BY:	TR	
JOB NO.	ESC23008	DRAWING NO. ESC2300802 — SHT. 1 OF 2

C:\Users\bryan\Dropbox (ESC Corporation)\ESC Corp\Projects\23008_Hayward\Phase 4-PM\Drawings\ESC2300802sht1revL.dwg, 12/1/2014 12:06:30 PM, DWG To PDF.pc3

HYDROGEN SULFIDE REMOVAL SYSTEM PROCEDURE FOR OPERATING

Removing, Handling and Disposing of Spent Iron Sponge Media

Preparing for spent Iron Sponge Media Removal

After taking the Iron Sponge filled Hydrogen Sulfide Removal vessel off-line and depressurizing (see Shutdown instructions in Section ~~2.11)~~ 2.12 run water into the vessel to pre-soak the media. This is best accomplished by pumping water into the bottom of the vessel until it reaches the top. In this way, the water loosens the spent Iron Sponge media by buoying it upward, making it easier to remove. It is necessary that spent Iron Sponge media be kept water-soaked before, during and after discharge. In depressurizing, soaking with water, and discharging, standard safety precautions should be observed in keeping with any possible venting of gas. In all cases, open flames, spark-producing procedures, cigarette smoking, etc., are NOT permitted.

Removing from Vessel

After depressurizing and soaking with water, remove the 36 inch diameter vessel top cover to expose spent iron sponge media.

If the water pre-soaking has not loosened the spent Iron Sponge media sufficiently to “rake” and vacuum it, then the use of a high pressure (1,000 to 1,500 psig) water lance and vacuum are the best way to remove it. A high pressure water hose or “lance” should be used from the bottom dump or side manhole and directed upward to create a “tunnel” through the center of the ISIS™ media bed. Then it can be employed through the top of the vessel to wash the spent Iron Sponge media downward and out the side discharge. With a service contract, ESC performs the media change-outs.

While “digging” out via augers, drills, steel bars, picks, etc. are sometimes employed; these alternatives are labor-consuming and not as efficient as the high pressure hose or water lance.

HYDROGEN SULFIDE REMOVAL SYSTEM PROCEDURE FOR OPERATING

After discharging the spent Iron Sponge media (preparation for disposal):

(Note: if the media is given a water soak and air scour before removing it from the vessels, the following procedure is not necessary).

The spent iron sponge can be safely transported, but in the U.S. it is subject to D.O.T. regulations as a low-level hazard, Class 4.2, group (2). These concerns can be eliminated with the following procedure:

Spread the discharged spent Iron Sponge media out into a layer 5-6 inches deep.

Make sure it is thoroughly soaked with water.

Allow the spent Iron Sponge media to react with the air for a period of ten (10) days per US DOT mandated procedure.

During reaction with the oxygen in the air, heat is given off and is absorbed by the excess water of soaking, thereby preventing drying out and possible smoldering of the spent Iron Sponge media. Oxygen pick-up or “passivation,” is complete when not more heat is being given off. The Iron Sponge media then consists primarily of ferric oxide and elemental sulfur.

The spent Iron Sponge media may now be disposed in a landfill*.

*Disposal does not take into consideration the particular VOCs in a biogas stream that may accumulate in the spent Iron Sponge media, and testing may be required by the landfill before it is accepted for disposal. The results from a standard EPA TCLP test (8260 semi-volatiles) are accepted by most landfills. Should you have any questions, you can contact ESC at (425) 497-8111.

The main composition of iron sponge is Fe_2O_3, wood and water. The composition ratios are 29 to 30% iron oxide 25 to 30% wood (dry basis), and 40 to 45% water. If operated anaerobically (without sodium carbonate and oxygen addition), then the iron oxide in the iron sponge is converted to iron sulfides (Fe_2S and Fe_2S_3 primarily). Iron sponge media operated anaerobically is pyrophoric.

HYDROGEN SULFIDE REMOVAL SYSTEM PROCEDURE FOR OPERATING

If operated aerobically, the iron oxide in the iron sponge picks up and releases the hydrogen sulfide as elemental sulfur. This reaction is exothermic, as well as anaerobically operated iron sponge when it comes into contact with air. Your system is designed to be operated aerobically to avoid having spent iron sponge that is pyrophoric (ignitable).

It is impossible to know exactly what the composition of the spent iron sponge is without analyzing it, but based on the assumption that it has been operated anaerobically at least part of the time, it should contain the following after it has been exposed to the air until it is completely passivated by oxygen, and kept moist (composition is in % by weight):

Fe_2O_3 - 28 to 30%
Wood (dry basis) - 25%
Sulfur (elemental) - 6.8% to 13.6%
Water 28% to 38%
FeS_2 - trace to < 1%
F_3SO_4 - trace to < 1%

Removing, Handling and Disposing of Spent SulfaTreat Media

SulfaTreat media is usually free-flowing when it is spent and can be vacuumed out and put into bulk bags for transport to a landfill for disposal. If it is not free-flowing, it may need to be mechanically broken up to be able to be removed by vacuum. The density of the spent media will be around 68 lb. per cubic foot.

2.15 HYDROGEN SULFIDE REMOVAL SYSTEM SHUTDOWN INSTRUCTIONS

Shut Down

There are several non-emergency shutdown events. One due to interruption in the ADG flowing to the system, and the other for spent media change out.

SHUT DOWN DUE TO GAS FLOW INTERRUPTION

1 Close the gas inlet (BFV002, BFV003), and gas outlet (BFV006, BFV007, BFV008,and BFV009) valves. This will isolate the vessels from the gas flow.

2 Drain any collected drip water from the bottom of the Hydrogen Sulfide Removal vessel by opening the drain valve. After all liquid is drained, close this valve.

SHUT DOWN FOR CHANGING OUT SPENT MEDIA

Perform steps 1) and 2) above. Run water into the vessel to wet the iron sponge media. This is best accomplished by pumping water into the bottom of the vessel until it reaches the top. In this way, the water loosens the spent Iron Sponge media by buoying it upward, making it easier to remove. This water must be drained out before the media is removed from the vessel.

The SulfaTreat media does not require this water soak or air scour procedure. The vessels should be purged to remove the digester gas as it will contain methane and will be flammable.

Refer to Sections 2.11 and 2.13 for additional information.

2.12 HYDROGEN SULFIDE REMOVAL SYSTEM PROCEDURE FOR START-UP, SHUT-DOWN AND BREAK-IN

Before Start-Up -- Loading New Media (Iron Sponge):

1. Isolate the H_2S vessels from the gas stream by closing inlet and outlet valves.
(Refer to valve location diagram in Section 2.13)

2. Open vent valves to vent any gas from the vessel.

3. Remove the top man way from the vessel

4. Close vent valves

5. Use a crane to lift the media bags above the top manhole. Each vessel holds 10 bulk bags of iron sponge media.

6 Use a utility knife to cut the bags open and let the media drop into the vessel. Take care to break the media into as small of pieces as possible as it is loaded into the vessel. This will ensure uniform gas passage through the media, and will allow for better gas filtration.

7. Fill the vessel with the media one foot at a time, tamping the outer perimeter of the media with the end of a 2x4 to prevent gas bypass. Workers should kneel on a piece of plywood to avoid putting deep footprints in the media. Fill the vessel until the media is at the proper height, but not higher than 18" below the spray nozzles (for proper spray coverage).

8. Remove the loading plank and plank retainers from the vessel

9. Replace the top man way cover and man way cover gasket. Tighten four evenly spaced bolts in small increments to ensure that the cover makes flat, even contact with the gasket.

10. Torque all the man way cover bolts to 65 foot−pounds using a crisscross pattern. DO NOT OVER-TIGHTEN.

13. Re-torque all the man way cover bolts using a crisscross pattern.

The Hydrogen Sulfide Removal Vessels are now ready for startup.

HYDROGEN SULFIDE REMOVAL SYSTEM PROCEDURE FOR START-UP, SHUT-DOWN AND BREAK-IN

Start-Up

1. When putting the vessel into service, a large dip in Methane and spike in Oxygen content will occur in the process gas stream. To avoid sending this bad gas to the end use device, the end use device will need to be taken off line and the process gas will need to be purged from the skid discharge piping for several minutes.

2. Open valves as per valve sequencing chart to introduce the process gas stream into the vessels. (Refer to valve location drawing in Section 2.13).

Break-In

There is no separate break-in period for the Hydrogen Sulfide removal system. During the first week of operation, if iron sponge is used, it is important to note the sodium carbonate consumption and the influent hydrogen sulfide levels. This information is to be recorded on the log sheet provided and sent to ESC at the end of each month.

HYDROGEN SULFIDE REMOVAL SYSTEM PROCEDURE FOR START-UP, SHUT-DOWN AND BREAK-IN

Shut Down

There are 2 shut down events. One due to interruption in the ADG flowing to the system, and one for spent media change out.

Shut down due to gas flow interruption

1 Close the gas inlet and gas outlet valves. It is best to close all valves, BFV002 through BFV009 to make sure the vessels are isolated. This will isolate the vessels from the gas flow. For additional information, refer to the valve sequencing chart.

2 Drain any collected drip water from the bottom of the Hydrogen Sulfide Removal vessel by opening the drain valves at the bottoms of the vessels. After all liquid is drained, close these valves.

The system is now in Shut Down mode.

HYDROGEN SULFIDE REMOVAL SYSTEM PROCEDURE FOR START-UP, SHUT-DOWN AND BREAK-IN

Before Start-Up -- Loading New Media (SulfaTreat):

1. Isolate the H_2S vessels from the gas stream by closing inlet and outlet valves. (Refer to valve location diagram in Section 2.13)

2. Open vent valves to vent any gas from the vessel.

3. Remove the top man way from the vessel

4. Close vent valves

5. Install the poly pad in the bottom of the vessels on top of the fiberglass grating.

6. Use a crane to lift the media bags above the top manhole. Each vessel holds 16 bulk bags of SulfaTreat media. Do not fill the vessels above the upper tangent line.

6 Use a utility knife to cut the bags open and let the media drop into the vessel. Repeat until 16 bags of media have been installed.

7. Replace the top man way cover and man way cover gasket. Tighten four evenly spaced bolts in small increments to ensure that the cover makes flat, even contact with the gasket.

8. Torque all the man way cover bolts to 65 foot−pounds using a crisscross pattern. DO NOT OVER-TIGHTEN.

9. Re-torque all the man way cover bolts using a crisscross pattern.

The Hydrogen Sulfide Removal Vessels are now ready for startup.

5.10 SILOXANE REMOVAL SYSTEM PROCEDURE FOR START-UP, SHUT-DOWN AND BREAK-IN

Before Start-Up -- Loading New Media for DOWNFLOW Configuration:

1. If there are H_2S removal vessels installed upstream of the siloxane removal vessels, Isolate them from the gas stream by closing their inlet and outlet valves. (Refer to valve location diagram in Section 5.13)

2. Open vent valves (BV020, BV021) on Vessels SIL-001 and SIL-002 to relieve any pressure in the vessels.

3. Remove top man way cover to gain access to vessel interior.

4. Close the vent valves on Vessels SIL-001 and SIL-002.

5. Activated Carbon Media is non-toxic, however a dust mask should be used when loading.

6. Activated Carbon Media is provided in bulk (1,100 lb.) bags for this project. Bags are marked with the specific Activated Carbon Media type recommended for this biogas. Each vessel holds 3 bulk bags, or 3,300 lb. of media.

7. Remove the media access port on the top of each vessel.

8. Using a crane, lift a bulk bag so that it is positioned over this opening. The bulk bags will either have a rolled up spout with a drawstring or they may have to be cut open with a utility knife. Open the bag and allow the media to flow into the vessel.

SILOXANE REMOVAL SYSTEM PROCEDURE FOR START-UP, SHUT-DOWN AND BREAK-IN

Before Start-Up -- Loading New Media:

9. The vessels are designed to each hold 3 whole bulk bags of media or three thousand three hundred (3,300) pounds. After installing the media, it should be raked flat to get rid of the “cone” and provide a flat surface for uniform gas flow.

10. The Siloxane Removal filter vessels should be filled so that there is a minimum of 6” to 12” clearance between the top of the media bed and the upper tangent line of the vessel (where the top is welded onto the side shell of the vessel). <u>It is important to not overfill the vessels, and in particular to not obstruct the gas outlet as this will cause excessive pressure drop to occur.</u> Place any unused media in the original packaging and store in a dry location for later use. (There may be media left over as densities of this product vary).

11. Replace the top man way cover and tighten so that it is gas tight. Normally, 75 ft.-pounds of torque is adequate.

12. Repeat the same process for each vessel. <u>If loading more than 3,300 lb. of media into each vessel, try, as much as possible to have the same amount of media in each vessel.</u>

13. The Siloxane Removal System is now ready for startup.

SILOXANE REMOVAL SYSTEM PROCEDURE FOR START-UP, SHUT-DOWN AND BREAK-IN

Start-Up

Note 1: When putting the siloxane removal system into service, a large dip in Methane and spike in Oxygen content will occur in the process gas stream. To avoid sending this "bad" gas to the end use device, the end use device will need to be taken off line and the process gas will need to be purged from the skid discharge piping for several minutes.

Note 2: This is a step-wise start-up procedure. It is assumed that the Hydrogen Sulfide removal system is filled with media and is ready to be started up. The H_2S Removal™ Vessels will be commissioned first, followed by the Siloxane Removal Vessels.

1. Make sure the siloxane removal vessel is isolated from the digester gas stream by closing the respective inlet and outlet valves. Make sure all drain valves, vents and sample taps are also closed. Refer to the valve diagram chart in Section 5.13 for additional information.

2. Remove oxygen from the siloxane removal vessel by flushing with Nitrogen. This is a "fill and bleed" procedure. Air will be purged from the siloxane removal vessel media by Nitrogen gas. Important: Do not allow air to enter the vessel after purging with nitrogen.

3. Nitrogen purge procedure (Note: This will require two (2) full nominal 235 ft^3 nitrogen compressed gas cylinders per vessel). These steps must be performed in the proper sequence:

   a) Make sure both the Siloxane Removal vessel Inlet Valves and Outlet Valves are closed on each vessel.
   b) The Siloxane Removal vessels will require 1 cylinder each, or 2 total to purge the air from all of the siloxane removal media installed in the 2 Siloxane Removal vessels. Connect a full cylinder (approximately 235 cubic feet, compressed) of technical grade nitrogen gas to the fitting at the Siloxane Removal Vessel Drain and Purge Valve located at the bottom of the vessel. This is a 1/2" ball valve. Make sure you have a pressure regulator connected between the nitrogen cylinder and the Siloxane Removal vessel and follow all safety procedures.

   c) Make sure Siloxane Removal Vessel Vent Valve is closed.

   d) Open Siloxane Removal Vessel Drain/Purge Valve (where the nitrogen enters the vessel) at the bottom of the vessel.

SILOXANE REMOVAL SYSTEM PROCEDURE FOR START-UP, SHUT-DOWN AND BREAK-IN

Start-Up - Continued

e) SLOWLY open the valve on the nitrogen cylinder. Slowly open the valve on the pressure regulator and allow nitrogen gas to enter until the vessel until the Siloxane Removal Vessel is slightly pressurized (about ½ to 1 psig). Note: Do not allow the Nitrogen gas to pressurize the Siloxane Removal vessel above 2.5 psig as this is not necessary and will just waste nitrogen.

f) Close the valve on the nitrogen cylinder. Allow to stand for 5 minutes.

g) Open Siloxane Removal Vessel Discharge Vent Valve on top of the vessel and allow nitrogen to vent off. After venting is complete, close Vent Valve.

h) Repeat steps c through f, for the remaining vessels and change the nitrogen cylinders when empty.

i) When all vessels have been purged, remove Nitrogen cylinders and move away from work area. Secure so they cannot tip over.

j) Make sure all Siloxane Removal vessels have been vented and that the Vent Valves and the ½" drain valve used for Nitrogen purging are closed.

k) Both the Siloxane Removal Vessels are now ready to be commissioned.

Note: The media in the Siloxane removal vessels may experience a temperature rise as they become acclimated to the digester gas. This temperature rise must be controlled to not exceed 20 degrees F. above the influent gas temperature as this could harm the media. To control the temperature rise, it may be necessary to either slow down the gas flow or stop it by closing and re-opening the Siloxane Removal Vessel Inlet Valve occasionally.

4) Examine the valve location chart in Section 5.12. The following procedure assumes that both the Siloxane Removal Vessels are isolated from digester gas flow at startup. Locate the following valves and note their position (open or closed) before proceeding with the startup:

Siloxane Removal Vessel Inlet and Outlet Valves
Digester Gas Header Inlet and Outlet (Isolation) Valves

Make sure the Siloxane Removal Vessels inlet and outlet valves are closed.

SILOXANE REMOVAL SYSTEM PROCEDURE FOR START-UP, SHUT-DOWN AND BREAK-IN

Start-Up - Continued

5: Open the Inlet Valve on the Siloxane Removal Vessel 1. Slowly open the Siloxane Removal Vessel 2 Outlet Valve. Allow digester gas to pass through the Siloxane Removal Vessels until the outlet temperature equals the inlet temperature. The activated carbon media may generate heat as the nitrogen is displaced with the digester gas. The temperature will continue to rise until the activated carbon media reaches equilibrium with characteristics of the biogas. This temperature rise can exceed 20 degrees F. higher than the Siloxane Removal Vessel Outlet Valve to keep the temperature rise at a minimum (below 20 degrees F. above influent digester gas temperature). Do not allow the temperature exceed 20 degrees F. above the inlet gas temperature to the Siloxane Removal Vessel.

6. Full digester gas flow through the Siloxane Removal Siloxane Removal filter vessels can be achieved when the outlet temperature equals the inlet temperature to the Siloxane Removal filter vessel. This can take 30 minutes or longer depending on the characteristics of the biogas. Record the time it takes to reach temperature equilibrium. This is normally when all of the “bad gas” (low methane content) has been purged from the system.

7. Make sure the particulate filter is operational when the Siloxane Removal vessels are commissioned and when the Siloxane Removal vessels are online.

8. When either of these vessels needs to be taken off-line, you will need to close the inlet and the outlet valves to isolate each vessel. Unless it is de-pressurized, this vessel will be at the pressure of the digester gas, so appropriate safety considerations must be taken.

SILOXANE REMOVAL SYSTEM PROCEDURE FOR START-UP, SHUT-DOWN AND BREAK-IN

SHUT-DOWN

There are 3 shut down events. One due to interruption in the ADG flowing to the system, one due to the moisture removal system not operating, and one for spent media change out.

Shut down due to gas flow interruption

1. Close the gas inlet and gas outlet valves. This will isolate the vessel(s) from the gas flow.

2. Drain any collected drip water from the bottom of the Siloxane Removal vessel(s) by opening ½" drain valve. After all liquid is drained, close this valve.

The system is now in Shut Down mode

Shut down due to moisture removal system not operating

1. Repeat procedure above.

Shut down due to gas flow interruption

1. Repeat procedure above.

Break-In

There is no break-in period required for the Siloxane Removal System.

2.8 HYDROGEN SULFIDE REMOVAL SYSTEM DETAILED DESCRIPTION OF THE FUNCTION OF EACH PRINCIPAL SYSTEM COMPONENT

Part Type	Location	Description
H_2S Removal.	DG-H_2S-SCRUB1, 2	108" D SS 316 Vessels – contain Iron Sponge for removal of H_2S

Product Name: ISIS™ Hydrogen Sulfide Removal System	
Description	2 x 9 ft. diameter x 12 ft straight SS316 vessels complete with internals
Media Fill	~~39,000~~ pounds of Iron Sponge 42,000 lbs
Operation	DOWNFLOW
Layout	Bottom side inlet, bottom center outlet,-flanged
Overall height	242” from grade to top of pressure relief valve assembly
Platform Height	Platform deck is 143 and 3/8” from grade.
Mounting	Vessels are free standing on concrete pad supplied by others
Pressure rating	5 psig
Internals	9” 316 SS and connections, threaded
External Connection	9” 316 SS flanged inlet and outlet
Coatings	None
Media fill port	36” circular top side flanged opening.
Side access port	36” circular, flanged w/blind flange
Assembly	Filter and internals are fully assembled
Weight, Empty	Nominal 7,800 lb. vessel, legs, and appurtenances
Weight with media	Nominal 46,800 lb. loaded with Iron Sponge media

HYDROGEN SULFIDE REMOVAL SYSTEM DETAILED DESCRIPTION OF THE FUNCTION OF EACH PRINCIPAL SYSTEM COMPONENT

Part Type	Location	Description
Media	FLT 301	H_2S Removal Media – Iron Sponge, nominal 410 cubic feet (each)

420 cubic feet

Properties:

	Iron Sponge Media Required Properties
Fe_2O_3 (Hydrated form)	15 – 18 lb. per cubic foot, loaded density
Fe_2O_3 (% weight on a dry basis)	50% to 65%
Moisture (% weight)	40% to 50%
pH	8 to 10
Product Bulk Density, kg/M^3	770 to 865
Product Bulk Density, lb/ft^3	48 to 54

Note: The above information is not to be construed as constituting a specification for a performance warranty. Performance specifications for Iron Sponge Media are developed in conjunction with application engineering studies and / or field pilot testing and are included in the process warranty.

Packaging: 42 cubic foot bulk bags or 2 cubic foot paper bags (20 per pallet)
Shipping Point: Chicago, IL 60608

This information has been gathered from standard reference materials and/or test procedures and is believed to be true and accurate. It is offered solely for your consideration and verification. None of the information presented shall be construed as constituting a warranty or representation, expressed or implied, for which we assume legal responsibility or that the information or goods described is fit for any particular use either alone or in combination with other goods or processes, or that it's use does not conflict with existing patent rights. No license is granted to infringe on any patent rights or to practice any patented invention.

06/22/2006

HYDROGEN SULFIDE REMOVAL SYSTEM DETAILED DESCRIPTION OF THE FUNCTION OF EACH PRINCIPAL SYSTEM COMPONENT

Part Type	Location	Description
Media	HSS001,2	H_2S Removal Media – Iron Sponge, ~~nominal 410 cubic feet (each)~~

MATERIAL SAFETY DATA SHEET

EMERGENCY CONTACT: The safety coordinator can be reached at (425) 497-8111 during business hours (8:30 a.m. to 5:00 p.m. Pacific Time). Outside of normal business hours call and leave message. For medical emergencies contact local medical emergency providers.

Section 1 - Substance Identification

Product Name:	IRON SPONGE MEDIA
Revision Date:	09/18/2004
H.M.I.S. Rating:	H=1, F=0, R=1, CR=1
Shipping Classification:	Non-regulated, non-hazardous (no UN number needed)

Section 2 – Composition/Ingredients

Name, Formula, CAS Number:	OSHA PEL	ACGIH	Other Limits Recommended	% By Weight (Nominal)
Iron Oxide, Fe_2O_3, 1309-37-1	10 mg/m^3	5 mg/m^3	10 mg/m^3	30 – 35
Sodium Carbonate, Na_2CO_3, 497-19-8	No TLV or others established			1 – 10
Calcium Carbonate, $CaCO_3$, 1317-65-3	15 mg/m^3	5 mg/m^3	10 mg/m^3	1 – 10
Water	---	---	---	40 – 50
Wood Chips	---	---	---	15 – 20

Section 3 - Physical Data

Description:	Dark Brown solid (irregular pieces / particles).
Vapor Pressure:	N/A.
Bulk Density:	0.7 TO 0.9 g/cc or 770 to 865 kg/m^3.
Solubility:	Not soluble.
Flash Point:	N/A.
Stability:	Stable.
Incompatibility:	None.
Conditions To Avoid:	None.

HYDROGEN SULFIDE REMOVAL SYSTEM DETAILED DESCRIPTION OF THE FUNCTION OF EACH PRINCIPAL SYSTEM COMPONENT

Part Type	Location	Description
Media	FLT 301	H_2S Removal Media – Iron Sponge, ~~nominal 410 cubic feet (each)~~

MATERIAL SAFETY DATA SHEET

Section 4 - Fire and Explosion Hazards

Flash Point:	N/A.
Flammability:	Non-flammable
Spontaneous Combustibility:	N/A.
Extinguishing Media:	Copious amounts of water.
Special Precautions:	None.
Unusual Fire And Explosion Hazards:	None.
Hazardous Decomposition Products:	Carbon monoxide may be formed in the event of a fire.

Section 5 - Reactivity Data

Stability: Stable

Conditions to Avoid: Do Not Allow To Dry Out

Section 6 –Health Hazard Data

This product is non-toxic through ingestion. This material is non-toxic through skin absorption. This product is not a primary skin irritant. No sensitization effects are known. The physical nature of this product may irritate the respiratory system. The physical nature of this product may produce eye irritation.

Routes Of Entry:	Skin contact, inhalation ingestion (unlikely)
Health Hazards:	Skin contact may cause irritation Inhalation of dust may cause temporary respiratory discomfort.
Carcinogenic Of Other Health Effects	None established
Of Long-Term Low Level Exposure:	None established
Signs And Symptoms Of Exposure:	No consistent patterns have been established.
Medical Conditions Generally Aggravated by Exposure:	None established.

HYDROGEN SULFIDE REMOVAL SYSTEM DETAILED DESCRIPTION OF THE FUNCTION OF EACH PRINCIPAL SYSTEM COMPONENT

Part Type	Location	Description
Media	FLT 301	H_2S Removal Media – Iron Sponge, ~~nominal 410 cubic feet (each)~~

MATERIAL SAFETY DATA SHEET

Section 6 –Health Hazard Data (Continued)

Emergency and First Aid Procedures:

Eye:	Flush thoroughly with water
Skin:	Wash with soap and water
Ingestion:	Give 2-3 glasses of water. Do not induce vomiting. Get immediate medical attention. If vomiting occurs, give more water.
Inhalation:	Remove to fresh air. Get medical attention if irritation develops.

Section 7 - Handling and Storage

If Material Is Released Or Spilled:	Unused product should be swept up and discarded or repackaged.
Waste Disposal Method:	Unused product may be disposed of by any appropriate means, including land filling. All federal, state, and local regulations should be followed.

Section 8 – Control Measures

Eye Protection:	Safety glasses or goggles recommended.
Protective Gloves:	Recommended.
Other Protective Clothing:	Clothing should be worn to avoid exposure of skin.
Respiratory Protection:	NIOSH approved dust masks are recommended during handling.
Ventilation:	Local exhaust is recommended to control dust.
Work/Hygienic Practices:	Wash thoroughly with soap and water after handling.

OTHER: This product, when dry can generate dust, which can be irritating. Product that has been stored for a long time can be dry and will require wetting before handling.

This MSDS does not apply to **spent** iron sponge media. Consult ESC Corp. for safe handling practices on spent iron sponge media at (425) 497-8111.

5.7 SILOXANE REMOVAL SYSTEM DETAILED DESCRIPTION OF THE FUNCTION OF EACH PRINCIPAL SYSTEM COMPONENT

Part type	Location	Description
Vessel	**SIL001,002**	**48” D SST Vessel – contains siloxane removal media**

Product Name: Siloxane Removal 48D120 Siloxane Removal System	
Description	2 x 4.0 ft. diameter x 12 ft straight side SST vessels with all internals and external piping
Media Fill	3,300 pounds of activated carbon media per vessel
Operation	Upflow
Layout	Bottom center inlet, bottom side outlet,-flanged
Overall height	220” from grade to top of uppermost point
Height to Platform Deck	163” from grade to platform
Mounting	Vessels are free standing on concrete pad supplied by others
Pressure rating	10 psig maximum
Internals	3” 304 SS
External Connection	6” SST flanged inlet and outlet
Coatings	None
Media fill port	24” circular man way on top side
Side access port	16” elliptical man way on bottom side
Assembly	Filter and internals are fully assembled
Weight, Empty	Nominal 2,680 lb., each vessel, with legs and appurtenances
Weight with media	Nominal 9,280 lb. loaded with siloxane removal media

SILOXANE REMOVAL SYSTEM DETAILED DESCRIPTION OF THE FUNCTION OF EACH PRINCIPAL SYSTEM COMPONENT

Part Type	Location	Description
Media	**SIL001, 002**	**Siloxane Removal Media –nominal 126 ft^3 each**

ACTIVATED CARBON MEDIA

FOR SILOXANE REMOVAL FROM RENEWABLE METHANE SOURCES

The appropriate activated carbon media is engineered specifically to remove siloxanes and similar contaminants from landfill gas (LFG) and anaerobic digester gas (ADG). The media that ESC uses is used alone or in combination with other media ina Gas Purification System to produce the desired ultimate gas quality. For additional information, consult ESC Corporation or an authorized ESC Representative. Only approved activated carbon may be used in the Siloxane Removal System. This can either be purchased from ESC, or be approved before it is shipped to the site. To meet approval, the activated carbon to be used must document a minimum Carbon Tetrachloride Number of 70 from the ASTM D3467 analysis as documented by certificate of analysis containing the manufacturer's lot analysis, as well as the analysis from an independent laboratory, the cost which shall be the City of Hayward's responsibility.

Properties:

	ACTIVATED CARBON MEDIA			
			↓	
Activated Carbon type	L	L Plus	H	H Plus
Siloxane Number	35	42	48	54
Density, lb/ft^3	29 - 30	28 - 29	27 - 28	26 - 27
Pellet size (diameter ± 10%)	2.0mm	2.0mm	2.0mm	2.0mm

**The siloxane number is a measure of the media's ability to remove certain types of organosilicons in a typical anaerobic digester gas application.*

SILOXANE REMOVAL SYSTEM DETAILED DESCRIPTION OF THE FUNCTION OF EACH PRINCIPAL SYSTEM COMPONENT

Part Type	Location	Description
Media	SIL001, 002	Siloxane Removal Media –nominal 126 ft^3 each

ACTIVATED CARBON MEDIA

FOR SILOXANE REMOVAL FROM RENEWABLE METHANE SOURCES

Activated Carbon media may be purchased through ESC, and details are below.

Packaging: Bags, drums or bulk.
Shipping Points: Bell Gardens, CA 90202; Stockton, CA 95203; Redmond, WA, 98052; Columbus, OH 43210

Shipping Information: The domestic freight classification for Activated Carbon Types L, L Plus, H and H Plus carbon-based media is NMFC #40560; UFC #20460. Please refer to the Material Safety Data Sheet for additional information.

This information has been gathered from standard reference materials and/or test procedures and is believed to be true and accurate. It is offered solely for your consideration and verification. None of the information presented shall be construed as constituting a warranty or representation, expressed or implied, for which we assume legal responsibility or that the information or goods described is fit for any particular use either alone or in combination with other goods or processes, or that it's use does not conflict with existing patent rights. No license is granted to infringe on any patent rights or to practice any patented invention.

08/03/2009

SILOXANE REMOVAL SYSTEM DETAILED DESCRIPTION OF THE FUNCTION OF EACH PRINCIPAL SYSTEM COMPONENT

Part Type	Location	Description
Media	SIL001, 002	Siloxane Removal Media –nominal 126 ft^3 each

MATERIAL SAFETY DATA SHEET

EMERGENCY CONTACT: The safety coordinator can be reached at (425) 497-8111 during business hours (8:30 a.m. to 5:00 p.m. Pacific Time). Outside of normal business hours call and leave message. For medical emergencies contact local medical emergency providers.

SECTION I - SUBSTANCE IDENTIFICATION

Product Name: Types L, L PLUS, H, H PLUS (non-regulated and non-hazardous).
CAS Number: 7440-44-0 Formula: C
Shipping Classification: Non-Hazardous (NMFC #40560, UFC #20460)
Revision Date: 8/03/2009 REVISION NUMBER: 004
H.M.I.S. Rating: H=1, F=1, R=1, PP=E.

SECTION II - HAZARDOUS INGREDIENTS

This material is comprised of 100% inert graphite. There are no established PEL, TWA or TLV values for this material. Caution should be taken for a respirable dust. The ACGIH TWA for respirable dust is 2.5 mg/m^3. This product has no carcinogenic properties.

SECTION III - PHYSICAL DATA

Description: Black solid (granule or pellet).
Vapor Pressure: N/A.
Density: 0.3 TO 0.6 g/cc.
Solubility: Not soluble.
Flash Point: N/A.
Stability: Stable.
Incompatibility: Avoid contact with strong oxidizers.
Conditions To Avoid: None.

SILOXANE REMOVAL SYSTEM DETAILED DESCRIPTION OF THE FUNCTION OF EACH PRINCIPAL SYSTEM COMPONENT

Part Type	Location	Description
Media	SIL001, 002	Siloxane Removal Media –nominal 126 ft^3 each

MATERIAL SAFETY DATA SHEET

SECTION IV - FIRE AND EXPLOSION HAZARDS

Flash Point:	N/A.
Non-Flammable:	OSHA Method 16 CFR 1500.44 (incorporated by reference in 29CFR 1910.1200)
Not Spontaneously Combustible:	DOT Method 49CFR Part 173, Appendix E.
Extinguishing Media:	Water.
Special Precautions:	None.
Unusual Fire And Explosion Hazards:	Contact with strong oxidizers (liquid oxygen, chlorine, ozone, or permanganates may result in fire.
Hazardous Decomposition Products:	Carbon monoxide may be formed in the event of a fire.

SECTION V - HEALTH DATA

This product is non-toxic through ingestion. This material is non-toxic through skin absorption. This product is not a primary skin irritant. No sensitization effects are known. The physical nature of this product may irritate the respiratory system. The physical nature of this product may produce eye irritation.

Routes Of Entry:	Ingestions or inhalation
Health Hazards:	Inhalation of dust may cause temporary respiratory discomfort. (The acute inhalation LD50 (rat) is >12 g/kg
Carcinogenic Of Other Health Effects of Long-Term Low Level Exposure:	None established
Signs And Symptoms Of Exposure:	No consistent patterns have been established.
Medical Conditions Generally Aggravated By Exposure:	None established.
Emergency and First Aid Procedures:	
Eye:	Flush thoroughly with water
Skin:	Wash with soap and water
Ingestion:	Give 2-3 glasses of milk or water to dilute. Get immediate medical attention. If vomiting occurs, give more fluids.
Inhalation:	Remove to fresh air. Get medical attention if irritation develops.

SILOXANE REMOVAL SYSTEM DETAILED DESCRIPTION OF THE FUNCTION OF EACH PRINCIPAL SYSTEM COMPONENT

Part Type	Location	Description
Media	**SIL001, 002**	**Siloxane Removal Media –nominal 126 ft^3 each**

MATERIAL SAFETY DATA SHEET

SECTION VI - SPILL OR LEAK PROCEDURES

If Material Is Released Or Spilled:	Unused product should be swept up and discarded or repackaged.
Waste Disposal Method:	Unused product may be disposed of by any appropriate means.

SECTION VII - HANDLING AND STORAGE

Eye Protection:	Safety glasses or goggles recommended. Protective Gloves: Recommended.
Other Protective Clothing:	None required.
Respiratory Protection:	A high efficiency particulate filter is recommended, whenever excessive dust may be generated.
Ventilation:	Local exhaust is recommended, sufficient to control dust.
Work/Hygienic Practices:	Wash thoroughly with soap and water after handling.

SECTION VIII - SPECIAL PRECAUTIONS

OTHER: CAUTION!! This product, when wet, removes oxygen from the air causing a severe hazard to workers in confined spaces. Sampling and work procedures for low oxygen levels should be taken whenever workers may be entering vessels, enclosed, or confined spaces. All federal, state, and local regulations should be observed.

MiSWACO

FILTER FOAM GRADE: 60 PPI CHARCOAL BLEND

	BRITISH UNITS	SI METRIC UNITS	TEST STANDARD[1] ANSI/ASTM D3574-86 (EXCEPT WHERE NOTED)
Density, apparent lb/f^3 (kg/M^3)	1.3-1.5	21 Minimum	Test A
Indentation Force Deflection[2] 25% Defl. 2" (50mm) lb/50"^{2} (N/323 cm^2)	15-25	67-111	Test B
Tensile Strength psi, minimum. (KPA, minimum)	15	103	Test E
Ultimate Elongation %, minimum	150	150	Test E
Tear Strength lb/in, minimum (N/M minimum)	2.5	438	Test F
Combustibility[3]	Listed-Class 2		UL Subject 900
Clickability	Good to Excellent		GFC Test Method #1
Pores per Inch	60 +/- 5		GFC Test Method #26

[3]This flammability rating is not intended to reflect hazards presented by this or any other material under actual fire conditions.

[1]Test standard specifies SI units only. Values indicated here are in both SI and British Units using appropriate conversion factors and rounding off where expedient.

This information is furnished without warranty, representation, inducements, or license of any kind, INCLUDING, BUT NOT LIMITED TO THE IMPLIED WARRANTIES OF MERCHANTABILITY AND FITNESS FOR A PARTICULAR USE OR PURPOSE, except that it is accurate to the best of DFP's knowledge or obtained from sources believed by DFP to be accurated, and DFP does not assume any legal responsibility for use or reliance upon same. Custoemrs are encouraged to conduct their own test. Before using any product, read its label.

Siloxane Removal Vessels & Access Platform

Hydrogen Sulfide Removal Vessels

Access on East Side of Vessels

Access on North and East Sides

Hydrogen Sulfide Removal Vessels - Access Platform

Access for Media Removal on East Side

Hydrogen Sulfide Removal Vessels